NASA/TM–2018–220096

FUN3D Manual: 13.4

Robert T. Biedron, Jan-Reneé Carlson, Joseph M. Derlaga, Peter A. Gnoffo, Dana P. Hammond, William T. Jones, Bil Kleb, Elizabeth M. Lee-Rausch, Eric J. Nielsen, Michael A. Park, Christopher L. Rumsey, James L. Thomas, Kyle B. Thompson, and William A. Wood

Langley Research Center, Hampton, Virginia

October 2018

NASA STI Program. . . in Profile

Since its founding, NASA has been dedicated to the advancement of aeronautics and space science. The NASA scientific and technical information (STI) program plays a key part in helping NASA maintain this important role.

The NASA STI Program operates under the auspices of the Agency Chief Information Officer. It collects, organizes, provides for archiving, and disseminates NASA's STI. The NASA STI Program provides access to the NASA Aeronautics and Space Database and its public interface, the NASA Technical Report Server, thus providing one of the largest collection of aeronautical and space science STI in the world. Results are published in both non-NASA channels and by NASA in the NASA STI Report Series, which includes the following report types:

- TECHNICAL PUBLICATION. Reports of completed research or a major significant phase of research that present the results of NASA programs and include extensive data or theoretical analysis. Includes compilations of significant scientific and technical data and information deemed to be of continuing reference value. NASA counterpart of peer-reviewed formal professional papers, but having less stringent limitations on manuscript length and extent of graphic presentations.

- TECHNICAL MEMORANDUM. Scientific and technical findings that are preliminary or of specialized interest, e.g., quick release reports, working papers, and bibliographies that contain minimal annotation. Does not contain extensive analysis.

- CONTRACTOR REPORT. Scientific and technical findings by NASA-sponsored contractors and grantees.

- CONFERENCE PUBLICATION. Collected papers from scientific and technical conferences, symposia, seminars, or other meetings sponsored or co-sponsored by NASA.

- SPECIAL PUBLICATION. Scientific, technical, or historical information from NASA programs, projects, and missions, often concerned with subjects having substantial public interest.

- TECHNICAL TRANSLATION. English-language translations of foreign scientific and technical material pertinent to NASA's mission.

Specialized services also include organizing and publishing research results, distributing specialized research announcements and feeds, providing information desk and personal search support, and enabling data exchange services.

For more information about the NASA STI Program, see the following:

- Access the NASA STI program home page at `http://www.sti.nasa.gov`

- E-mail your question to `help@sti.nasa.gov`

- Phone the NASA STI Information Desk at 757-864-9658

- Write to:
  NASA STI Information Desk
  Mail Stop 148
  NASA Langley Research Center
  Hampton, VA 23681-2199

NASA/TM–2018–220096

FUN3D Manual: 13.4

Robert T. Biedron, Jan-Reneé Carlson, Joseph M. Derlaga, Peter A. Gnoffo, Dana P. Hammond, William T. Jones, Bil Kleb, Elizabeth M. Lee-Rausch, Eric J. Nielsen, Michael A. Park, Christopher L. Rumsey, James L. Thomas, Kyle B. Thompson, and William A. Wood

Langley Research Center, Hampton, Virginia

National Aeronautics and
Space Administration

Langley Research Center
Hampton, Virginia 23681-2199

October 2018

The use of trademarks or names of manufacturers in this report is for accurate reporting and does not constitute an official endorsement, either expressed or implied, of such products or manufacturers by the National Aeronautics and Space Administration.

Available from:

NASA STI Program / Mail Stop 148
NASA Langley Research Center
Hampton, VA 23681-2199
Fax: 757-864-6500

Abstract

This manual describes the installation and execution of FUN3D version 13.4, including optional dependent packages. FUN3D is a suite of computational fluid dynamics simulation and design tools that uses mixed-element unstructured grids in a large number of formats, including structured multiblock and overset grid systems. A discretely-exact adjoint solver enables efficient gradient-based design and grid adaptation to reduce estimated discretization error. FUN3D is available with and without a reacting, real-gas capability. This generic gas option is available only for those persons that qualify for its beta release status.

Contents

About this Document **11**

Acknowledgments **12**

Quick Start **13**

1 Introduction **17**
- 1.1 Primary Capabilities and Features . . . 17
- 1.2 Requirements . . . 18
- 1.3 Grid Generation . . . 19
- 1.4 Obtaining FUN3D . . . 19

2 Conventions **20**
- 2.1 Compressible Equations . . . 21
- 2.2 Incompressible Equations . . . 23
- 2.3 Generic Gas Equations . . . 24
- 2.4 Unsteady Flows . . . 25
- 2.5 Turbulent Flows . . . 26

3 Boundary Conditions **27**
- 3.1 X-Symmetry, Y-Symmetry, and Z-Symmetry . . . 29

4 Grids **30**
- 4.1 File Endianness . . . 30
- 4.2 Supported Grid Formats . . . 30
  - 4.2.1 AFLR3 Grids . . . 31
  - 4.2.2 FAST Grids . . . 31
  - 4.2.3 VGRID Grids . . . 32
  - 4.2.4 FieldView Grids . . . 32
  - 4.2.5 FELISA Grids . . . 33
  - 4.2.6 FUN2D Grids . . . 33
- 4.3 Translation of Additional Grid Formats . . . 34
  - 4.3.1 PLOT3D Grids . . . 34
  - 4.3.2 CGNS Grids . . . 35
- 4.4 Implicit Lines . . . 36
- 4.5 Grid Mirroring . . . 36

5 Flow Solver, NODET **38**
- 5.1 Flow Solver Execution . . . 38
- 5.2 Command Line Options . . . 38
- 5.3 Output Files . . . 39
  - 5.3.1 Flow Visualization . . . 39

5.3.2 Flow Visualization Output From Existing Solution . . 40

6 Adjoint Solver, DUAL **41**
6.1 Convergence of the Linear Adjoint Equations 41
6.2 Required Directory Hierarchy and Executing DUAL 41
6.3 `rubber.data` 42
6.4 Output Files 42

7 Grid Motion **43**
7.1 Overview of `moving_body.input` 44
7.2 Choosing the Type of Mesh Movement 44
7.3 4×4 Transform Matrices 45
7.4 Verifying Grid Motion Inputs 47
7.5 Static Grid Manipulations 48
7.5.1 Grid Transform 48
7.5.2 Body Transform 48
7.5.3 Surface From File 48

8 Grid Adaptation **50**
8.1 Geometry Specification and Grid Freezing for REFINE 50
8.1.1 No geometry, where the surface nodes are frozen. . . . 50
8.1.2 FAUXGeom for Planar Boundaries 51
8.2 Performing Feature-Based Adaptation 51
8.3 Performing Adjoint-Based Adaptation 52
8.4 Scripting Grid Adaptation 52
8.4.1 Input File `case_specifics` for `f3d` Script 53
8.5 Examining Convergence of the Adaptive Grid Process 54
8.6 Adaptive 2D Simulations 55

9 Design Optimization **56**
9.1 Objective/Constraint Functions 57
9.1.1 Terminology 57
9.1.2 Functional Form 58
9.2 Some Details on Specific Objective/Constraint Functions 60
9.2.1 Lift-to-Drag Ratio (Keyword: `clcd`) 60
9.2.2 Rotorcraft Figure of Merit (Keyword: `fom`) 60
9.2.3 Rotorcraft Propulsive Efficiency (Keyword: `propeff`) . 61
9.2.4 Rotorcraft Thrust (Keyword: `rtr_thrust`) 61
9.2.5 RMS of Stagnation Pressure (Keyword: `pstag`) 61
9.2.6 Engine Inflow Distortion (Keyword: `distort`) 61
9.2.7 Near-field p/p_∞ Pressure Target (Keyword: `boom_targ`) 63

9.2.8 Coupled sBOOM Ground-Based Signatures, Noise Metrics, and Equivalent Areas (Keyword: sboom) 64
9.2.9 Supersonic Mach Cut Equivalent Area Distribution (Keyword: ae) 65
9.2.10 RMS of Pressure in User-Defined Box, Pointwise dp/dt, $d\rho/dt$ (Keyword: press_box) 67
9.2.11 Target Pressure Distributions (Keyword: cpstar) . . . 67
9.3 Geometry Parameterizations 67
9.3.1 Surface Grid Extraction 68
9.3.2 Access to Executables 68
9.3.3 Notes on Using Sculptor™ 68
9.3.4 Using Other Parameterization Packages 69
9.4 Design Optimization Directory Structure 71
9.5 Contents of the ammo Directory 72
9.5.1 &design namelist in design.nml 72
9.6 Contents of the description.i Directory 75
9.6.1 Geometry Parameterization Files 76
9.6.2 rubber.data 78
9.6.3 ae_target.dat (optional) 85
9.6.4 body_grouping.data (optional) 85
9.6.5 command_line.options (optional) 85
9.6.6 cpstar.data.j (optional) 86
9.6.7 files_to_save.data (optional) 86
9.6.8 machinefile (optional) 87
9.6.9 pressure_target.dat (optional) 87
9.6.10 transforms.i (optional) 87
9.7 Contents of the model.i Directory 87
9.8 Running the Optimization 88
9.8.1 Filesystem Latency Problems 89
9.9 Multi-objective Design 89
9.9.1 KSOPT 90
9.9.2 PORT, SNOPT™ 90
9.10 Multi-point Design 90
9.10.1 Linear Combination of Objective Functions 91
9.10.2 Combination of Objective Functions using the Kreisselmeier-Steinhauser Function 92
9.10.3 Single-Point Objective Function with Off-Design Constraint Functions 92
9.11 Optimization of Two-Dimensional Geometries 92
9.12 Using a Different Optimization Package 93
9.13 Implementing New Cost Functions/Constraints 93
9.14 Forward Mode Differentiation Using Complex Variables 94

References **97**

A Installation **105**
A.1 Extracting Files . . . 105
A.2 Configure Introduction . . . 105
A.3 Alternative Installation Path . . . 106
A.4 Fortran Compiler Option Tuning (FTune) . . . 106
A.5 Specialized AVX-512 Support . . . 107
A.6 Complex Variable Version . . . 107
A.7 Internal Libraries . . . 108
A.7.1 KNIFE . . . 108
A.7.2 REFINE . . . 108
A.8 External Libraries . . . 108
A.8.1 MPI . . . 108
A.8.2 ParMETIS . . . 110
A.8.3 Zoltan . . . 111
A.8.4 SUGGAR++-1.0.10 or Higher . . . 112
A.8.5 DiRTlib v1.40 or higher . . . 112
A.8.6 6-DOF . . . 112
A.8.7 KSOPT . . . 113
A.8.8 PORT . . . 113
A.8.9 SNOPT™ . . . 113
A.8.10 NPSOL™ . . . 114
A.8.11 DOT/BIGDOT™ . . . 114
A.8.12 Tecplot™ . . . 114
A.8.13 CGNS . . . 115
A.8.14 sBOOM . . . 115
A.8.15 SPARSKIT . . . 115

B Fun3D Input Files **116**
B.1 `stop.dat` . . . 117
B.2 `[project_rootname].flow` . . . 117
B.3 `remove_boundaries_from_force_totals` . . . 117
B.4 `fun3d.nml` . . . 118
B.4.1 &project . . . 121
B.4.2 &raw_grid . . . 122
B.4.3 &force_moment_integ_properties . . . 125
B.4.4 &grid_transform . . . 126
B.4.5 &body_transform . . . 128
B.4.6 &governing_equations . . . 131
B.4.7 &reference_physical_properties . . . 134
B.4.8 &noninertial_reference_frame . . . 136
B.4.9 &inviscid_flux_method . . . 138

B.4.10 &turbulent_diffusion_models 143
B.4.11 &spalart 147
B.4.12 &gammaretsst 149
B.4.13 &code_run_control 150
B.4.14 &nonlinear_solver_parameters 154
B.4.15 &update_limits 158
B.4.16 &shuffle_generic 160
B.4.17 &linear_solver_parameters 162
B.4.18 &elasticity_gmres 164
B.4.19 &hiarms_actuator_disk 167
B.4.20 &boundary_conditions 168
B.4.21 &periodicity 186
B.4.22 &two_d_trans 187
B.4.23 &three_d_trans 189
B.4.24 &flow_initialization 190
B.4.25 &component_parameters 193
B.4.26 &time_avg_params 199
B.4.27 &global 200
B.4.28 &volume_output_variables 202
B.4.29 &boundary_output_variables 213
B.4.30 &sampling_output_variables 226
B.4.31 &sampling_parameters 240
B.4.32 &spatial_avg 252
B.4.33 &slice_data 255
B.4.34 &overset_data 268
B.4.35 &rotor_data 270
B.4.36 &adapt_metric_construction 272
B.4.37 &adapt_mechanics 280
B.4.38 &massoud_output 286
B.4.39 &sonic_boom 289
B.4.40 &sboom 291
B.4.41 &equivalent_area 299
B.4.42 &press_box_function 300
B.4.43 &pstag_function 302
B.4.44 &fan_distortion 303
B.4.45 &special_parameters 304
B.4.46 &partitioning 305
B.4.47 &fwh_acoustic_data 309
B.4.48 &vortex_generator 312
B.5 `moving_body.input` 316
B.5.1 &body_definitions 318
B.5.2 &forced_motion 322
B.5.3 &observer_motion 326

B.5.4 &motion_from_file . . . 329
B.5.5 &surface_motion_from_file . . . 331
B.5.6 &sixdof_motion . . . 332
B.5.7 &aeroelastic_modal_data . . . 336
B.5.8 &composite_overset_mesh . . . 341
B.6 `rotor.input` . . . 342
B.6.1 Header . . . 344
B.6.2 Actuator Surface Model . . . 344
B.6.3 Rotor Reference System . . . 346
B.6.4 Rotor Loading . . . 346
B.6.5 Blade Parameters . . . 347
B.6.6 Blade Element Parameters for `Load Type`=3 . . . 348
B.6.7 Pitch Control Parameters for `Load Type`=3 . . . 349
B.6.8 Prescribed Flap Parameters . . . 349
B.6.9 Prescribed Lag Parameters . . . 350
B.7 `tdata` . . . 351
B.7.1 `perfect_gas` Keyword . . . 351
B.7.2 `equilibrium_air_t` Keyword . . . 351
B.7.3 `equilibrium_air_r` Keyword . . . 352
B.7.4 `one` Keyword . . . 352
B.7.5 `two` Keyword . . . 352
B.7.6 `FEM` Keyword . . . 353
B.8 `species_thermo_data` . . . 353
B.9 `kinetic_data` . . . 355
B.10 `species_transp_data` . . . 357
B.11 `species_transp_data_0` . . . 358
B.12 `hara_namelist_data` . . . 358

C Troubleshooting **366**
C.1 What if I cannot run the solver in parallel? . . . 366
C.2 What if the solver has trouble starting or reports NaNs? . . . 366
C.3 What if the forces and moments aren't steady or residuals don't converge to steady-state? . . . 367
C.4 What if the solver dies unexpectedly? . . . 367
C.5 What if the compiler complains, "This module file was not generated by any release of this compiler"? . . . 368
C.6 What if the solver dies with an error like "Probable incomplete read of namelist: &some_namelist"? . . . 368
C.7 What if a segmentation fault occurs after "Calling ParMETIS"? 368
C.8 What if the solver dies with an error like "input statement requires too much data" after echoing the number of tetrahedra and nodes for a VGRID mesh? . . . 368
C.9 What if the solver reports that the Euler numbers differ? . . . 369

C.9.1 Euler Number Description 369
C.9.2 Determining the Impact of an Euler Number Mismatch 370
C.10 What if the initial residuals reported by the elasticity solver are unusually large when the input surface mesh is intended to recover the existing mesh? 371

About this Document

This manual is intended to guide an application engineer through configuration, compiling, installing, and executing the FUN3D simulation package. The focus is on the most commonly exercised capabilities. Therefore, some of the immature or rarely exercised capabilities are intentionally omitted in the interest of clarity.

FUN3D is distributed in two forms, a full version `eqn_type='generic'` and a version with the generic gas capability disabled (referred to as the perfect gas version `eqn_type = 'compressible'` or `eqn_type='incompressible'`). See section 1.4 for details. Most user's needs are met with the perfect gas version, which is most commonly distributed. This manual describes FUN3D with and without the generic gas capability. Features that are specific to an `eqn_type` are explicitly indicated.

This document is updated and released with each subsequent version of FUN3D. In fact, a significant portion is automatically extracted from the FUN3D source code. If you have difficulties, find any errors, or have any suggestions for improvement please contact the authors at

`Fun3D-Support@lists.nasa.gov`

We would like to hear from you.

Acknowledgments

A large portion of this content originated as a web-based manual, which contained contributions from Jan-Renee Carlson, Karen Bibb, Bill Jones, Jeff White, Eric Lynch, Dave O'Brien, Marilyn Smith, and Clara Helm. Sriram Rallabhandi provided the description of sBOOM. The namelist documentation is parsed from Fun3D source code, which is written by the developers. Contributors to Fun3D include Ponnampalam (Bala) Balakumar, Karen Bibb, Bob Biedron, Jan Carlson, Mark Carpenter, Peter Gnoffo, Dana Hammond, Bill Jones, Bil Kleb, Beth Lee-Rausch, Eric Nielsen, Hiroaki Nishikawa, Mike Park, Chris Rumsey, Jim Thomas, Veer Vatsa, Jeff White, Alejandro Campos, Rajiv Shenoy, Marilyn Smith, Joe Derlaga, Natalia Alexandrov, W. Kyle Anderson, Harold Atkins, Bill Wood, Austen Duffy, Clara Helm, Chris Cordell, Kyle Thompson, Hicham Alkandry, Shelly Jiang, Eric Lynch, Jennifer Abras, Nicholas Burgess, Dave O'Brien, Tommy Lambert, Ved Vyas, Shatra Reehal, Kan Yang, Andrew Sweeney, Brad Neff, Genny Pang, Gregory Bluvshteyn, Dan Gerstenhaber, Geoff Parsons, Rena Rudavsky, Aaron Walden, Xinyu Zhang, and Sreekanth Ravindran. Since the release of the NASA TM version of the manual (v12.4), the following people have reported bugs, usability issues, and/or suggested documentation improvements: Bill Sellers, Tim Conners, Karen Deere, Ryan Durscher, Troy Lake, Kelly Thomas, Ken Waithe, and Joel Malissa.

Quick Start

This section takes you from source code tarball to a rudimentary flow solution using single processor execution on a typical Unix-style environment (e.g. Linux, Mac® OS) with a Fortran compiler and the GNU Make utility. FUN3D is most commonly executed in parallel, but the intent here is to provide the most basic installation, setup, and execution of the FUN3D flow solver without the complexity of any third-party libraries or packages.

See section 1.4 for instructions on obtaining the FUN3D source code tarball. Once you have it, unpack the source code tarball, configure it for your system (section A), compile it, and add the executables directory to your search path. For C Shell, e.g.,

```
tar zxf fun3d-13.4-*.tar.gz
cd fun3d-13.4-*
mkdir _seq
cd _seq
  ../configure --prefix=${PWD}
  make install
  setenv PATH ${PWD}/bin:${PATH}
cd ..
```

For Bourne Shell, the `setenv` command is `export PATH=${PWD}/bin:${PATH}`. The change to the `PATH` environment variable can be made permanently by adding the `setenv` or `export` command to your shell start up file. Next, move to the `doc/quick_start` directory,

```
cd doc/quick_start
```

where you will find a very coarse 3D wing grid (`inv_wing.fgrid`) intended for inviscid flow simulation (section 4). Also in this directory are the associated boundary conditions file `inv_wing.mapbc` (section 3) and a FUN3D input file `fun3d.nml` in Fortran namelist format (section B.4).

Execute the flow solver (section 5.1) by running the command

```
nodet
```

This should produce screen output similar to

```
FUN3D 13.4-8cc2c92 Flow started 10/17/2018 at 16:16:42 with 1 processes
Contents of fun3d.nml file below------------------------
&project
  project_rootname = 'inv_wing'
/
&raw_grid
  grid_format = 'fast'
  data_format = 'ascii'
/
&governing_equations
  viscous_terms = 'inviscid'
```

```
/
&reference_physical_properties
  mach_number     = 0.7
  angle_of_attack = 2.0
/
&code_run_control
  restart_read       = 'off'
  steps              = 150
  stopping_tolerance = 1.0e-12
/
&global
  boundary_animation_freq = -1
/
&boundary_output_variables
  number_of_boundaries = -1
  boundary_list        = '2,7-8'
/
Contents of fun3d.nml file above------------------------
  ... Use the reference Mach number for the freestream:  T
    ... opening inv_wing.fgrid
    ... nnodesg: 6309 ntet: 35880 ntface: 1392

cell statistics: type,      min volume,      max volume, max face angle
cell statistics:  tet,  0.38305628E-05,  0.14174467E+02,  143.526944837
cell statistics:  all,  0.38305628E-05,  0.14174467E+02,  143.526944837

     ... Constructing partition node sets for level-0...               35880 T
     ... Edge Partitioning ....
     ... Boundary partitioning....
     ... Reordering for cache efficiency....
     ... Write global grid information to inv_wing.grid_info
     ... Time after preprocess TIME/Mem(MB):  ********     96.34     96.23
  NOTE: kappa_umuscl set by grid: .00

 Grid read complete
  y-symmetry metrics modified/examined: 1102/1102
 Iter            density_RMS  density_MAX   X-location   Y-location   Z-location
    1  0.611767950151108E-04  0.68431E-03  0.25001E-01  0.43479E-01  0.00000E+00
       Lift  0.775285036093966E-01         Drag  0.352117247285817E-01
    2  0.342644121204683E-04  0.11389E-02  0.41388E+01  0.24706E+01 -0.21321E+01
```

⋮

```

   61  0.217555843541799E-12  0.83222E-11  0.65000E+01  0.00000E+00  0.65000E+01
       Lift  0.809619929262272E-01         Drag  0.108249850731833E-01

 Writing inv_wing.flow (version 12.2)
  inserting current history iterations 61
 Time for write: .0 s


 Writing boundary output: inv_wing_tec_boundary.dat
  Time step: 61, ntt: 61, Prior iterations: 0
 Done.
```

If FUN3D completed successfully, a Mach 0.7 inviscid flow over a very coarse representation of an ONERA M6 semi-span wing [1] at two degrees angle of attack is available. If not, please refer to Troubleshooting on page 366.

With visualization software capable of reading Tecplot™ files, you can visualize various surface quantities with `inv_wing_tec_boundary.dat` as shown by

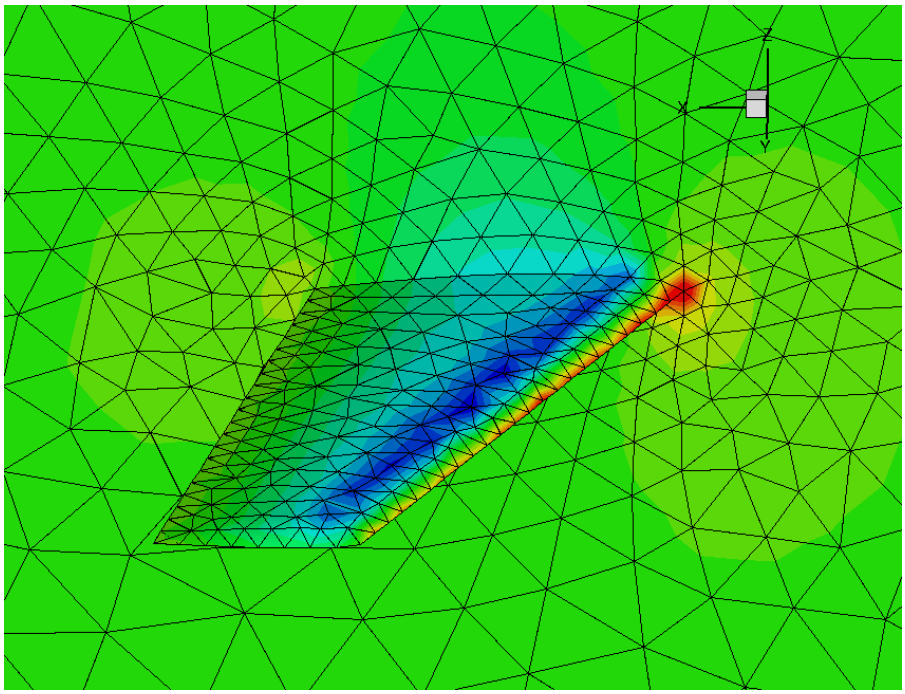

Figure 1: Mach 0.7 flow about a coarse ONERA M6 semi-span wing at 2 degrees angle of attack.

the pressure contours in Fig. 1. Iterative convergence history can be plotted from `inv_wing_hist.dat` as shown in Fig. 2. Histories of all five conservation equation residual norms are denoted `R_1`–`R_5`, and the lift coefficient convergence history is denoted `C_L`.

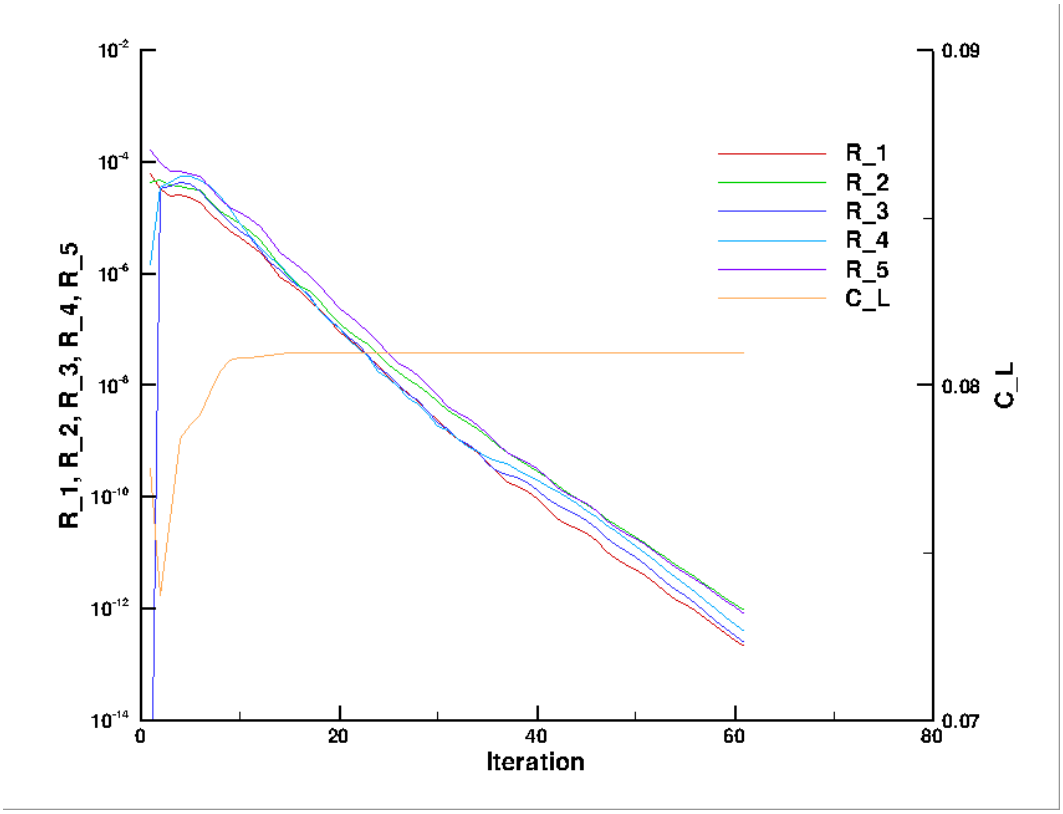

Figure 2: Iterative convergence history for coarse ONERA M6 wing.

1 Introduction

FUN3D began as a research code in the late 1980s. [2] The code was created to develop new algorithms for unstructured-grid fluid dynamic simulations of incompressible and compressible transonic flows. The project has since grown into a suite of codes that cover not only flow analysis, but adjoint-based error estimation, mesh adaptation, and design optimization of fluid dynamic problems extending into the hypersonic regime. [3]

FUN3D is currently used as a production flow analysis and design tool to support NASA programs. Continued research efforts have also benefited by the improvements to stability, ease of use, portability, and performance that this shift to simultaneous support of development and production environments has required. These benefits also include the rapid evaluation of new techniques on realistic simulations and a rapid maturation of experimental techniques to production-level capabilities.

1.1 Primary Capabilities and Features

The primary capabilities of FUN3D are:

- Parallel domain decomposition with Message Passing Interface (MPI) communication for distributed computing
- Two-dimensional (2D) and Three-dimensional (3D) node-based, finite-volume discretization
- Thermodynamic models: perfect gas (compressible and incompressible) and thermochemical equilibrium, and non-equilibrium[1]
- Time-accurate options from first- to fourth-order with temporal error controllers
- Upwind flux functions: flux difference splitting, flux vector splitting, artificially upstream flux vector splitting, Harten-Lax-van Leer contact, low dissipation flux splitting scheme, and others
- Turbulence models: Spalart-Allmaras, Menter k-omega SST, Wilcox k-omega, detached eddy simulation, and others, including specified or predicted transition
- Implicit time stepping where the linear system is solved using either point-implicit, line-implicit, or Newton-Krylov (multigrid is also under active development)

[1] The multi-species, thermochemical non-equilibrium capability requires the high-energy physics library, which is only made available upon specific request and under certain conditions, see section 1.4 for details.

- Boundary conditions for internal flows and propulsion simulation including inlets, nozzles, and system performance
- Grid motion: time-varying translation, rotation, and deformation including overset meshes and six degrees of freedom trajectory computations
- Adjoint- and feature-based grid adaptation
- Gradient based sensitivity analysis and design optimization via hand-coded discrete adjoint for reverse mode differentiation and automated complex variables for forward mode differentiation

Before exploring more advanced applications (e.g., grid adaptation, moving grids, overset grids, design optimization), the user should become familiar with FUN3D's basic flow solving capabilities and have appropriate computational capability available as indicated in the next section.

1.2 Requirements

The FUN3D development team's typical computing platform is Linux clusters; so this is the most thoroughly tested environment for the software. A number of users also run on other UNIX-like environments including Mac OS X™; these platforms are supported as well. Users have also run on other architectures such as Microsoft Windows™-based PC's; however, the team cannot provide explicit support for these environments.

The user will need GNU Make and a Fortran compiler that supports at least the Fortran 2003 standard. During configuration, the Fortran compiler is tested. Any newer Fortran features or extensions are detected are used to the greatest extent possible. Intel®, Portland Group®, and GFortran are tested by an automated build framework.

While the code can be compiled to run on only a single processor, as demonstrated in the Quick Start section, most applications will require compiling against an MPI implementation and one of the supported domain decomposition libraries to allow parallel execution.

The flow solver uses approximately 2.4 kilobytes of memory per grid point for a perfect gas RANS simulation with a loosely-coupled turbulence model. For example, a grid with one million mesh points would require approximately 2.4 gigabytes of memory. Memory usage will increase slightly with the increase in the number of processors because of the increasing boundary data exchanged. Different solution algorithms and co-visualization options will also require additional memory. Typically, one CPU core per 50,000 grid points is suggested, where a 3D mesh of 20 million grid points would require 400 cores.

1.3 Grid Generation

FUN3D has no grid generation capability. For internal development at NASA, the most common sources of 3D grids are VGRID (ViGYAN, Inc. and NASA Langley), SolidMesh/AFLR3 (Mississippi State), Pointwise (Pointwise, Inc.), and GridEx (NASA Langley).

For 2D grids, the development team normally uses the AFLR2 software written by Prof. Marcum et al. at Mississippi State University Center for Advanced Vehicular Systems (CAVS) SimCenter. Scripts are available to facilitate the use of this grid generator, but the generator itself must be obtained from Prof. Marcum. BAMG [4] is also used for 2D grid generation and adaptation.

1.4 Obtaining FUN3D

FUN3D is export restricted and can only be given to a "U.S. Person," which is a citizen of the United States, a lawful permanent resident alien of the U.S., or someone in the U.S. as a protected political asylee or under amnesty. The word "person" includes U.S. organizations and entities, such as companies or universities, see 22 CFR §120.15 for the full legal definition.

To obtain the FUN3D software suite, which will include the REFINE grid adaptation and mesh untangling library and the KNIFE cut-cell library, visit
`https://fun3d.larc.nasa.gov/chapter-1.html#request_perfect_gas_fun3d`
`https://fun3d.larc.nasa.gov/chapter-1.html#request_high_energy_fun3d`
These sections refer to the current NASA Software Catalog entries for FUN3D, which will guide you through the request process.

2 Conventions

This chapter discusses the coordinate system orientation and nondimensionalization used by FUN3D. The nomenclature for this section is

$$
\begin{aligned}
a &= \text{Speed of sound} \\
C &= \text{Sutherland constant} \\
e &= \text{Energy per unit mass} \\
f &= \text{Frequency} \\
h &= \text{Enthalpy per unit mass} \\
k &= \text{Thermal conductivity} \\
L &= \text{Length} \\
M &= \text{Mach number} \\
p &= \text{Pressure} \\
R &= \text{Gas constant} \\
Re &= \text{Reynolds number} \\
t &= \text{Time} \\
T &= \text{Temperature} \\
u, v, w &= \text{Cartesian components of velocity} \\
x, y, z &= \text{Cartesian directions} \\
\alpha &= \text{Angle of attack} \\
\beta &= \text{Angle of sideslip} \\
\gamma &= \text{Heat capacity ratio} \\
\mu &= \text{Viscosity} \\
\rho &= \text{Density}
\end{aligned}
$$

where an asterisk (*) denotes a dimensional quantity. A subscript *ref* denotes a reference quantity. For fluid variables, such as pressure, *ref* usually corresponds to the value 'at ∞' for external flows or another condition for internal flows. The units of various reference quantities must be consistent. For example, if the reference speed of sound is defined in feet/sec, then the dimensional reference length, ${L^*}_{ref}$, must be in feet. In what follows, L_{ref} is the length in the grid that corresponds to the dimensional reference length, ${L^*}_{ref}$; L_{ref} is considered dimensionless.

FUN3D's angle of attack, sideslip angle, and associated force coefficients are based on a body-fixed coordinate system:

- positive x is toward the back of the vehicle;
- positive y is toward the right of the vehicle; and

- positive z is upward

as shown in Fig. 3. This differs from the standard wind coordinate system by a 180 degree rotation about the y axis. The α and β flow angle conventions are shown in Fig. 4.

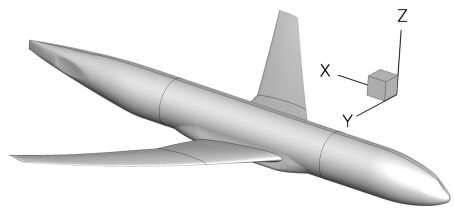

Figure 3: FUN3D body coordinate system.

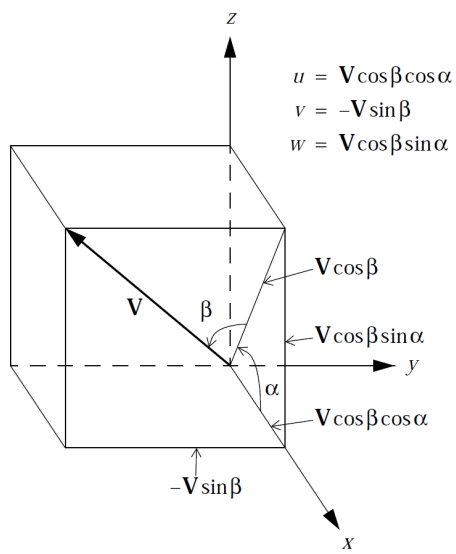

Figure 4: FUN3D freestream flow angle definition.

2.1 Compressible Equations

$$
\begin{aligned}
x &= x^*/(L^*{}_{ref}/L_{ref}) \\
y &= y^*/(L^*{}_{ref}/L_{ref}) \\
z &= z^*/(L^*{}_{ref}/L_{ref}) \\
t &= t^* a^*{}_{ref}/(L^*{}_{ref}/L_{ref})
\end{aligned}
$$

$$
\begin{aligned}
\rho &= \rho^*/\rho^*{}_{ref} & \rho_{ref} &= 1 \\
|V| &= |V^*|/a^*{}_{ref} & |V|_{ref} &= M_{ref}
\end{aligned}
$$

$$
\begin{array}{llll}
u & = u^*/{a^*}_{ref} & u_{ref} & = M_{ref}\cos\alpha\cos\beta \\
v & = v^*/{a^*}_{ref} & v_{ref} & = -M_{ref}\sin\beta \\
w & = w^*/{a^*}_{ref} & w_{ref} & = M_{ref}\sin\alpha\cos\beta \\
p & = p^*/({\rho^*}_{ref}{a^{*2}}_{ref}) & p_{ref} & = 1/\gamma \\
a & = a^*/{a^*}_{ref} & a_{ref} & = 1 \\
T & = T^*/{T^*}_{ref} & T_{ref} & = 1 \\
e & = e^*/({\rho^*}_{ref}{a^{*2}}_{ref}) & e_{ref} & = 1/(\gamma(\gamma-1)) + M_{ref}^2/2
\end{array}
$$

To see how the nondimensional Navier-Stokes equations that are solved in FUN3D are obtained from their dimensional counterparts, it is sufficient to look at the unsteady, one-dimensional equations for conservation of mass, momentum, and energy:

$$\frac{\partial \rho^*}{\partial t^*} + \frac{\partial(\rho^* u^*)}{\partial x^*} = 0$$

$$\frac{\partial(\rho^* u^*)}{\partial t^*} + \frac{\partial}{\partial x^*}\left[\rho^* {u^*}^2 + p^* - \frac{4}{3}\mu^*\frac{\partial u^*}{\partial x^*}\right] = 0$$

$$\frac{\partial e^*}{\partial t^*} + \frac{\partial}{\partial x^*}\left[(e^* + p^*)u^* - \frac{4}{3}\mu^* u^*\frac{\partial u^*}{\partial x^*} - k^*\frac{\partial T^*}{\partial x^*}\right] = 0$$

where k^* is the thermal conductivity. For a thermally and calorically perfect gas, we also have the equation of state, the definition of the speed of sound, and the specific heat relation:

$$T^* = \frac{p^*}{\rho^* R^*}$$

$${a^*}^2 = \gamma R^* T^* \quad (\gamma = {c_p}^*/{c_v}^*)$$

$${c_p}^* + {c_v}^* = R^* \qquad R^*/{c_p}^* = (\gamma - 1)/\gamma$$

The laminar viscosity is related to the temperature via Sutherland's law

$$\mu^* = {\mu^*}_{ref}\frac{{T^*}_{ref} + C^*}{T^* \quad + C^*}\left(\frac{T^*}{{T^*}_{ref}}\right)^{3/2}$$

where $C^* = 198.6°$R for air.

Substitution of the nondimensional variables defined above into the equation of state and the definition of the speed of sound gives:

$$T = \frac{\gamma p}{\rho} = a^2$$

Sutherland's law in nondimensional terms is given by

$$\mu = \frac{1 + C^*/T^*{}_{ref}}{T + C^*/T^*{}_{ref}} T^{3/2}$$

where C^* is the Sutherland constant ($C^* = 198.6°$R for air) and where $T^*{}_{ref}$ is in degrees Rankine.

Substitution of the dimensionless variables into the conservation equations gives, after some rearrangement,

$$\frac{\partial \rho}{\partial t} + \frac{\partial(\rho u)}{\partial x} = 0$$

$$\frac{\partial(\rho u)}{\partial t} + \frac{\partial}{\partial x}\left[\rho u^2 + p - \frac{4}{3}\frac{M_{ref}}{Re_{L_{ref}}}\mu\frac{\partial u}{\partial x}\right] = 0$$

$$\frac{\partial e}{\partial t} + \frac{\partial}{\partial x}\left[(e+p)u - \frac{4}{3}\frac{M_{ref}}{Re_{L_{ref}}}\mu u\frac{\partial u}{\partial x} - \frac{M_{ref}}{Re_{L_{ref}} P_r(\gamma - 1)}\mu\frac{\partial T}{\partial x}\right] = 0$$

where P_r is the Prandtl number (generally assumed to be 0.72 for air)

$$P_r = \frac{c_p^* \, \mu^*}{k^*}$$

and where $Re_{L_{ref}}$, the Reynolds number per unit length in the grid, corresponds to the input variable `reynolds_number` in the `fun3d.nml` file. $Re_{L_{ref}}$ is related to the Reynolds number characterizing the physical problem, $Re_{L^*{}_{ref}}$ by

$$Re_{L_{ref}} = \frac{\rho^*{}_{ref}|V^*|_{ref}(L^*{}_{ref}/L_{ref})}{\mu^*{}_{ref}} = \frac{\rho^*{}_{ref}|V^*|_{ref}L^*{}_{ref}}{\mu^*{}_{ref}}\frac{1}{L_{ref}} = \frac{Re_{L^*{}_{ref}}}{L_{ref}}$$

2.2 Incompressible Equations

$$\begin{aligned}
x &= x^*/(L^*{}_{ref}/L_{ref}) \\
y &= y^*/(L^*{}_{ref}/L_{ref}) \\
z &= z^*/(L^*{}_{ref}/L_{ref}) \\
t &= t^*|V^*|_{ref}/(L^*{}_{ref}/L_{ref})
\end{aligned}$$

$$\begin{aligned}
|V| &= |V^*|/|V^*|_{ref} & |V|_{ref} &= 1 \\
u &= u^*/|V^*|_{ref} & u_{ref} &= \cos\alpha\cos\beta \\
v &= v^*/|V^*|_{ref} & v_{ref} &= -\sin\beta \\
w &= w^*/|V^*|_{ref} & w_{ref} &= \sin\alpha\cos\beta \\
p &= p^*/(\rho^*{}_{ref}|V^*|^2_{ref}) & p_{ref} &= 1
\end{aligned}$$

For incompressible flows, FUN3D does not model any heat sources. The temperature T^* is constant and so is the viscosity μ^*. After dividing through by a constant reference density, the one-dimensional continuity and momentum equations are:

$$\frac{\partial u^*}{\partial x^*} = 0$$

$$\frac{\partial u^*}{\partial t^*} + \frac{\partial}{\partial x^*}\left[{u^*}^2 + \frac{p^*}{{\rho^*}_{ref}} - \frac{4}{3}\frac{{\mu^*}_{ref}}{{\rho^*}_{ref}}\frac{\partial u^*}{\partial x^*}\right] = 0$$

The fundamental difference between the nondimensionalization of the compressible equations and the incompressible equations is that the sound speed is used in the former and the flow speed in the latter. Substitution of the dimensionless variables defined above into the conservation equations gives, after some rearrangement,

$$\frac{\partial u}{\partial x} = 0$$

$$\frac{\partial u}{\partial t} + \frac{\partial}{\partial x}\left[u^2 + p - \frac{4}{3}\frac{1}{Re_{L_{ref}}}\frac{\partial u}{\partial x}\right] = 0$$

where, exactly the same as in the compressible-flow path, the Reynolds number per unit length in the grid is

$$Re_{L_{ref}} = \frac{{\rho^*}_{ref}|V^*|_{ref}{L^*}_{ref}}{{\mu^*}_{ref}} = \frac{Re_{{L^*}_{ref}}}{L_{ref}}$$

2.3 Generic Gas Equations

The generic gas path requires all reference quantities (velocity, density, temperature) be entered in the meter-kilogram-second (MKS) system. The transport property nondimensionalization includes the effects of rescaling using the grid length conversion factor. The nondimensionalization of other flow variables follows the practice used to derive the Mach number independence principle. Neither Mach number nor Reynolds number can be used to define reference conditions; these are derived from the fundamental reference quantities. The derived Reynolds number is relative to a one meter reference length. Temperature is never non-dimensionalized; it always appears in units of degrees Kelvin.

ρ	$= \rho^*/{\rho^*}_{ref}$	ρ^*_{ref}	[kg/m^3]
u	$= u^*/{V^*}_{ref}$	V^*_{ref}	[m/s]
v	$= v^*/{V^*}_{ref}$	T^*_{ref}	[K]
w	$= w^*/{V^*}_{ref}$	L^*_{ref}	[m]

$$
\begin{aligned}
a &= a^*/V^*{}_{ref} \\
p &= p^*/(\rho^*{}_{ref} V^{*2}_{ref}) \\
e &= e^*/V^{*2}_{ref} \\
h &= h^*/V^{*2}_{ref} \\
\mu &= \mu^*(T^*)/\rho^*{}_{ref} V^*_{ref} L^*_{ref}
\end{aligned}
$$

2.4 Unsteady Flows

One of the challenges in unsteady flow simulation is determining the nondimensional time step Δt. The number of time steps at that Δt necessary to resolve the lowest frequency of interest will impact the cost of the simulation and too large a Δt will corrupt the results with temporal errors. Time is non-dimensionalized within FUN3D by

$$
\begin{aligned}
t &= t^* a^*{}_{ref}/(L^*{}_{ref}/L_{ref}) && \text{(compressible)} \\
t &= t^* |V^*|_{ref}/(L^*{}_{ref}/L_{ref}) && \text{(incompressible)}
\end{aligned}
$$

where, as in the previous sections, quantities denoted with * are dimensional.

In all unsteady flows, one or more characteristic times $t^*{}_{chr}$ may be identified. In a flow with a known natural frequency of oscillation (e.g., vortex shedding from a cylinder), or in situations where a forced oscillation is imposed (e.g., a pitching wing), a dominant characteristic time is readily apparent. In such cases, if the characteristic frequency in Hz (cycles/sec) is $f^*{}_{chr}$, then

$$t^*{}_{chr} = 1/f^*{}_{chr}$$

In other situations, no oscillatory frequency may be apparent (or not known a priori). In such cases, the time scale associated with the time it takes for a fluid particle (traveling at a nominal speed of $|V^*|_{ref}$) to pass the body of reference length $L^*{}_{ref}$ is often used:

$$t^*{}_{chr} = L^*{}_{ref}/|V^*|_{ref}$$

The corresponding nondimensional characteristic time is therefore given by:

$$
\begin{aligned}
t_{chr} &= t^*{}_{chr} a^*{}_{ref}/(L^*{}_{ref}/L_{ref}) && \text{(compressible)} \\
t_{chr} &= t^*{}_{chr} |V^*|_{ref}/(L^*{}_{ref}/L_{ref}) && \text{(incompressible)}
\end{aligned}
$$

Once the nondimensional characteristic t_{chr} is determined, the user must decide on an appropriate number of time steps (N) to be used for resolving that characteristic time. Then the nondimensional time step may be specified as:

$$\Delta t = t_{chr} \ / \ N$$

The proper value of N must be determined by the user. However, a reasonable rule of thumb for second-order time integration is to take $N = 200$. Note that if there are multiple frequencies requiring resolution in time, the most restrictive should be used to determine Δt.

2.5 Turbulent Flows

The turbulence equations are nondimensionalized by the same reference quantities as the Navier-Stokes equations. The nondimensionalized variables used with the turbulence models are:

$$
\begin{aligned}
\mu &= \mu^* / \mu^*_{ref} \\
k &= k^* / a^{*2}_{ref} \\
\omega &= \omega^* \mu^*_{ref} / \rho^*_{ref} a^{*2}_{ref} \\
P_{\mathrm{k}} &= P^*_{\mathrm{k}} L^{*2}_{ref} / \mu^*_{ref} a^{*2}_{ref} \\
P_{\omega} &= P^*_{\omega} L^{*2}_{ref} / \mu^*_{ref} a^{*2}_{ref} \\
\tau_{ij} &= \tau_{ij}{}^* L^*_{ref} / (\mu^*_{ref} a^*_{ref})
\end{aligned}
$$

where, as in the previous sections, quantities denoted with * are dimensional.

3 Boundary Conditions

This chapter discusses the boundary conditions available in FUN3D. Table 1 lists the integers used to specify FUN3D boundary conditions with a short description. Each grid description subsection in section 4 indicates how these integers are specified. Details of the boundary condition implementation are provided by Carlson. [5] Details of symmetry boundary conditions are provided in section 3.1. Some boundary conditions have required or optionally specified parameters defined in the `&boundary_conditions` namelist, see section B.4.20 for further boundary condition details.

Table 1: FUN3D boundary conditions.

BC	Description	Notes
-1	Overlap	overset grid boundary
3000	Tangency	zero normal velocity, specified via fluxes
4000*	Viscous (strong)	explicitly set the no-slip condition
4100**	Viscous wall function	sets a shear stress condition via a wall function
4110*	Viscous (weak)	implicitly set the no-slip condition
5000	Farfield	Riemann invariants
5026	Extrapolate	supersonic outflow, variables extrapolated from the interior
5050	Freestream	external freestream, specified via fluxes
5051*	Back pressure	specified static pressure (switches to extrapolation boundary condition in the presence of supersonic flow)
5052*	Mach outflow	static pressure outflow boundary condition set via a specified subsonic Mach number (not for boundary layer ingestion)
6021	Symmetry plane 1	symmetry enforced by replacing x-momentum with zero velocity normal to arbitrary boundary plane.
6022	Symmetry plane 2	symmetry enforced by replacing y-momentum with zero velocity normal to arbitrary boundary plane.
6023	Symmetry plane 3	symmetry enforced by replacing z-momentum with zero velocity normal to arbitrary boundary plane.
6100	Periodicity	discrete periodicity, limited to nominally 2D grids extruded across n planes in a third dimension
6661	X-symmetry plane	enforces symmetry for x Cartesian plane
6662	Y-symmetry plane	enforces symmetry for y Cartesian plane
6663	Z-symmetry plane	enforces symmetry for z Cartesian plane
7011*	Subsonic inflow	subsonic inflow ($p_{t,bc} = p_{total,plenum}/p_{static,freestream}$, $T_{t,bc} = T_{total,plenum}/T_{static,freestream}$) for nozzle or tunnel plenum ($M_{inflow} < 1$)
7012*	Subsonic outflow	subsonic outflow ($p_{bc} = p_{static,inlet}/p_{static,freestream}$ for inlet flow (does not allow for reverse or supersonic flow at the outflow boundary face)
7021*	Reaction control jet plenum	models the plenum of a reaction control system (RCS) jet
7031*	Mass flow out	specification of massflow out of the control volume
7036*	Mass flow in	specification of massflow in to the control volume
7100*	Fixed inflow	fixed primitive variables in to control volume
7101*	Fixed inflow profile	specified profile
7103*	Pulsed supersonic inflow	pulsing supersonic flow
7104*	Ramped supersonic inflow	ramping supersonic flow
7105*	Fixed outflow	specified primitive outflow conditions

* See `&boundary_conditions` namelist in section B.4.20 to specify auxiliary information and for further descriptions.

** See `&turbulent_diffusion_models` namelist in section B.4.10 to specify auxiliary information.

3.1 X-Symmetry, Y-Symmetry, and Z-Symmetry

The symmetry condition in FUN3D enforces discrete symmetry. That is, if the mesh were mirrored about the symmetry plane and run as a full-span simulation, the residuals (and therefore the outputs, such as lift, drag, etc.) will be identical. The FUN3D automated tests include a case were a mirrored grid is compared to the symmetry boundary condition. Discrete symmetry is also enforced where multiple symmetry condition intersect (i.e., a corner of Y-symmetry and Z-symmetry).

Specifically, the condition enforces:

- Any points on a symmetry plane are first "snapped" to the average coordinate for that plane. Many grid generators will have some small amount of "slop" in their y-coordinates for points on a y-symmetry plane; FUN3D immediately pops all of the points onto the exact same plane, at least to double precision.
- The residual equation corresponding to the momentum normal to the symmetry plane is modified to reflect zero crossflow (i.e., $\rho v = 0$ on a y-symmetry plane).
- The least squares system used to compute gradients for inviscid reconstruction to the cell faces is augmented to include symmetry contributions across the symmetry plane(s).
- All gradients of the velocity normal to the symmetry plane (v for a y-symmetry plane) in the source terms for the turbulence models are zeroed out. Gradients of the tangential velocities are zeroed out normal to the symmetry plane (du/dy, dw/dy).
- No convective flux of turbulence normal to the symmetry plane.
- Grid metrics (e.g., areas, normals) are forced to be symmetric at symmetry planes.

4 Grids

This chapter explains how to supply the proper file formats to FUN3D, but does not cover how to create a mesh. See section 1.3 for grid generation guidance. FUN3D supports a direct reader for many grid formats. The format of the grid is specified in the `&raw_grid` namelist, section B.4.2. In addition to the directly read formats, translators are provided to convert additional grid formats into a format that can be read directly, see section 4.3. FUN3D has the ability to apply rigid body rotations while reading the grid (see section B.4.4 and section B.4.5) and mirror a grid about a symmetry plane (see section 4.5).

4.1 File Endianness

The ordering of bytes within a data item is known as "endianness." If the endianness of a file is different than the native endianness of the computer then a conversion must be performed. The endianness of each grid file format is described in section 4.2. If your compiler supports it, FUN3D will attempt to open binary files with a `open(convert=...)` keyword extension. Consult the documentation of the Fortran compiler you are using to determine if other methods are available. For example, with the Intel® Fortran compiler, the endianness of file input and output can be controlled by setting the `F_UFMTENDIAN` environment variable to `big` or `little`.

4.2 Supported Grid Formats

FUN3D natively supports the grid formats summarized in Table 2.

Table 2: File extensions.

Format	Grid files	BC File
AFLR3	`.ugrid`	`.mapbc`
FAST	`.fgrid`	`.mapbc`
FieldView	`.fvgrid_fmt`	`.mapbc`
	`.fvgrid_unf`	`.mapbc`
FUN2D	`.faces`	`.mapbc`
VGRID	`.cogsg`, `.bc`	`.mapbc`*
FELISA	`.gri`, `.fro`	`.bco`

* Same suffix, but GridTool format.

The standard FUN3D `.mapbc` file format contains the boundary condition information for the grid. The first line is an integer corresponding to the number of boundary groups contained in the grid file. Each subsequent line in this file contains two integers, the boundary face number and the FUN3D boundary condition integer; these numbers may optionally be followed by a character

string that specifies a "family" name for the boundary. The family name is required if the `patch_lumping` option (section B.4.2) is invoked to combine patches into fewer patch families. Below is a sample `.mapbc` file illustrative for all grid formats except GridTool/VGRID, FELISA, and FUN2D, which are described later.

```
13
1       6662  box_ymin
2       5025  box_zmax
3       5050  box_xmin
4       5025  box_ymax
5       5025  box_zmin
6       5025  box_xmax
7       3000  wing_upper
8       3000  wing_lower
9       3000  wing_upper
10      3000  wing_upper
11      3000  wing_lower
12      3000  wing_lower
13      3000  wing_tip
```

4.2.1 AFLR3 Grids

AFLR3, SolidMesh, Pointwise, and GridEx can all produce this format and FUN3D ships with translators that convert Plot3D and CGNS grids to AFLR3 format. The format is documented online at http://simcenter.msstate.edu/docs/solidmesh/ugridformat.html

AFLR3 grid file format types are indicated by file suffixes. The formatted (plain text) style has a `.ugrid` suffix while other types vary according to endianness (see section 4.1) and binary type as shown in Table 3. The boundary

Table 3: AFLR3 non-ASCII grid suffixes.

Type	Little endian	Big endian
Fortran Stream, C Binary	`.lb8.ugrid`	`.b8.ugrid`
Fortran Unformatted	`.lr8.ugrid`	`.r8.ugrid`

conditions are specified via the standard FUN3D `.mapbc` format.

4.2.2 FAST Grids

The `.fgrid` file contains the complete grid stored in ASCII FAST format. The format is documented online at http://simcenter.msstate.edu/docs/solidmesh/FASTformat.html The boundary conditions are specified via the standard FUN3D `.mapbc` format.

4.2.3 VGRID Grids

The .cogsg file contains the grid nodes and tetrahedra stored in unformatted VGRID format. The VGRID cogsg files always have big endian byte order regardless of the computer used in grid generation. See section 4.1 for instructions on specifying file endianness.

The .bc file contains the boundary information for the grid, as well as a flag for each boundary face. For viscous grids with a symmetry plane, VGRID is known to produce boundary triangles in the .bc file that are incompatible with the volume tetrahedra. FUN3D provides a repair_vgrid_mesh utility to swap the edges of these inconsistent boundary triangles. If FUN3D reports that there are boundary triangles without a matching volume tetrahedra, use this utility.

VGRID has a different .mapbc boundary condition format. For each boundary flag used in the .bc file, the .mapbc file contains the boundary type information. The VGRID boundary conditions are described at the website: http://tetruss.larc.nasa.gov/usm3d/bc.html. The FUN3D boundary condition integers can also be used in place of the VGRID boundary condition integers. Internally, FUN3D converts the VGRID boundary condition integers to the FUN3D boundary condition integers as indicated in Table 4.

Table 4: Boundary type mapping between VGRID and FUN3D.

VGRID	FUN3D
−1	−1
0	5000
1	6662
2	5005
3	5000
4	4000
5	3000
44	4000
55	3000

4.2.4 FieldView Grids

The .fvgrid_fmt file contains the complete grid stored in ASCII FieldView FV-UNS format, and the .fvgrid_unf file contains the complete grid stored in unformatted FieldView FV-UNS format. Supported FV-UNS file versions are 2.4, 2.5, and 3.0. With FV-UNS version 3.0, the support is only for the grid file in split grid and results format; the combined grid/results format is not supported. FUN3D does not support the arbitrary polyhedron elements of the FV-UNS 3.0 standard. For ASCII FV-UNS 3.0, the standard allows comment lines (line starting with !) anywhere in the file. FUN3D

only allows comments immediately after line 1. Only one grid section is allowed. The precision of the unformatted grid format should be specified by the `fieldview_coordinate_precision` variable in the `&raw_grid` namelist, see section B.4.2. The boundary conditions are specified via the standard FUN3D `.mapbc` format.

4.2.5 FELISA Grids

The `.gri` file contains the grid stored in formatted FELISA format. [6] The `.fro` file contains the surface mesh nodes and connectivities and associated boundary face tags for each surface triangle. This file can contain additional surface normal or tangent information (as output from GridEx or SURFACE mesh generation tools), but the additional data is not read by FUN3D. The `.bco` file contains a flag for each boundary face. If original FELISA boundary condition flags (1, 2, or 3) are used, they are translated to the corresponding FUN3D 4-digit boundary condition flag according to Table 5. Alternatively, FUN3D 4-digit boundary condition flags can be assigned directly in this file.

Table 5: Boundary type mapping between FELISA and FUN3D.

FELISA	FUN3D
1	3000
2	6662
3	5000

4.2.6 FUN2D Grids

The `.faces` file contains the complete grid stored in formatted FUN2D format (triangles). Internally, FUN3D will extrude the triangles into prisms in the y-direction and the 2D mode of FUN3D is automatically enabled. Output from the flow solver will include this one-cell wide extruded mesh.

Boundary conditions are contained in the FUN2D grid file as integers 0–8. The mappings to FUN3D boundary conditions are given in Table 6. If FUN3D does not detect a `.mapbc`, it will write a `.mapbc` file that contains the default Table 6 mapping. If you wish to change the boundary conditions from the defaults based on the `.faces` file, simply edit them in this `.mapbc` file and rerun FUN3D. The boundary conditions in the `.mapbc` file have precedence over the `.faces` boundary conditions. If you wish to revert to the boundary conditions in the `.faces` file after modifying the `.mapbc`, you can remove the `.mapbc` and rerun FUN3D.

Table 6: Boundary type mapping between FUN2D and FUN3D.

FUN2D	FUN3D
0	3000
1	4000
2	5000
3	−1
4	4010
5	4010
6	5005
7	7011
8	7012

4.3 Translation of Additional Grid Formats

While FUN3D supports the direct read of multiple formats, utilities are provided to translate additional grid formats into a format that FUN3D can read.

4.3.1 PLOT3D Grids

The utility `plot3d_to_aflr3` converts a PLOT3D structured grid to an AFLR3-format hexahedral unstructured grid. The original structured grid must be 3D multiblock http://www.grc.nasa.gov/WWW/wind/valid/plot3d.html (no iblanking) with the file extension `.p3d` for formatted ASCII or the the file extension `.ufmt` for Fortran unformatted. Only one-to-one connectivity is allowed with this option (no patching or overset). The grid should contain no singular (degenerate) lines or points. A neutral map file with extension `.nmf` is also required. This file gives boundary conditions and connectivity information. The `.nmf` file is described at http://geolab.larc.nasa.gov/Volume/Doc/nmf.htm.

Note that the `Type` name in the `.nmf` file must correspond with one of FUN3D's BC types, plus it allows the Type `one-to-one`. If the `Type` is not recognized, you will get errors like:

```
This may be an invalid BC index.
```

An example `.nmf` file is shown here for a simple single-zone airfoil C-grid ($5 \times 257 \times 129$) with six exterior boundary conditions and one `one-to-one` patch in the wake where the C-grid attaches to itself:

```
# ===== Neutral Map File generated by the V2k software of NASA Langley's GEOLAB =====
# ==================================================================================
# Block#   IDIM   JDIM   KDIM
# ----------------------------------------------------------------------------------
      1

      1      5    257    129

# ==================================================================================
# Type            B1  F1  S1   E1  S2   E2   B2  F2   S1   E1   S2  E2  Swap
# ----------------------------------------------------------------------------------
```

```
'tangency'         1   3   1  257   1  129
'tangency'         1   4   1  257   1  129
'farfield_extr'    1   5   1  129   1    5
'farfield_extr'    1   6   1  129   1    5
'one-to-one'       1   1   1    5   1   41    1   1    1    5  257 217 false
'viscous_solid'    1   1   1    5  41  217
'farfield_riem'    1   2   1    5   1  257
```

4.3.2 CGNS Grids

FUN3D is distributed with a utility `cgns_to_aflr3` that converts CGNS files http://cgns.sourceforge.net/ to AFLR3 grids. This utility will only be built if FUN3D is configured with a CGNS library, see section A.8.13. Only the `Unstructured` type of CGNS files are supported. The following CGNS mixed element types are supported: `PENTA_6` (prisms), `HEX_8` (hexes), `TETRA_4` (tets), and `PYRA_5` (pyramids).

The CGNS file must include `Elements_t` nodes for all boundary faces (type `QUAD_4` or `TRI_3`) to refer to the corresponding boundary elements. Otherwise, the utility cannot recognize what boundaries are present because it currently identifies boundaries via these 2D element types. The `cgns_to_aflr3` utility requires that the BC elements be listed either as a range or a sequential list.

It is also helpful to have separate element nodes for each boundary element of a given BC type. This way, it is easier to interpret the boundaries, i.e., body versus symmetry versus farfield. Visualization tools, such as Tecplot™, can easily distinguish the various boundary condition groups as long as each group has its own node in the CGNS tree. Under `BC_t`, `cgns_to_aflr3` reads these BC names, but ignores additional boundary data (e.g., `BCDataSet`, `BCData`).

Table 7: Boundary type mapping between CGNS and FUN3D.

CGNS	FUN3D
BCSymmetryPlane	6661, 6662, or 6663 via prompt
BCFarfield	5000
BCWallViscous	4000
BCWall	4000
BCWallInviscid	3000
BCOutflow	5026
BCTunnelOutflow	5026
BCInflow	5000
BCTunnelInflow	5000

If the CGNS file is missing BCs (no `BC_t` node), `cgns_to_aflr3` still tries to construct the BCs based on the boundary face `Elements_t` information. If these boundary element nodes have a name listed in Table 7, a `.mapbc` file will be written that contains the FUN3D boundary condition numbers. If the name is not recognized, you will see the message:

```
WARNING: BC type ... in CGNS file not recognized.
```

in which case you will need to fix it by by editing the .mapbc file manually. Always check the `.mapbc` file after the utility has run, to make sure that the boundary conditions have all been interpreted and set correctly. If a translation problem is observed, you should edit the `.mapbc` file before running FUN3D.

4.4 Implicit Lines

The standard implicit solution relaxation scheme in FUN3D is a point-implicit, which inverts the linearization of the residual at each node to compute an update to the solution. A line-implicit relaxation scheme can be used that inverts the linearization of a line of nodes simultaneously. Typically, lines are constructed for the subset of nodes in the boundary layer to address the stiffness inherent in the Navier-Stokes equations on anisotropic grids. Therefore, the use of line-implicit relaxation may improve the convergence of viscous flow simulations. These lines are used in conjunction with the standard point-implicit relaxation scheme. Detailed descriptions of both line and point relaxation schemes are provided by Nielsen et al. [7] Currently, every viscous boundary node must have one and only one associated implicit line. Lines of nodes are specified in a formatted file with the suffix `.lines_fmt` that contains the definitions of lines emanating from viscous boundary nodes as a list of node numbers. The format of the `.lines_fmt` file is

```
[total number of lines] [total number of points in lines]
[min points in a line] [max points in a line]
 [points in line 1]
  [first node of line 1]
  ...
  [last node of line 1]
 [points in line 2]
  ...
```

4.5 Grid Mirroring

A half computational domain with a symmetry plane can be mirrored to form a complete domain. This is a common use case for reflecting half of an aircraft configuration to form a full-span configuration to include the effects of side slip. Use the `--mirror_x`, `--mirror_y`, or `--mirror_z` command line options (section 5.2) to reflect the domain and remove the boundary patch located at $x = 0$, $y = 0$, or $z = 0$, respectively. When one or more of these mirror command line options are provided, FUN3D will start execution on a grid that is mirrored internally during grid processing. The symmetry plane boundary face patch will be removed and each non-symmetry face patch will duplicated about the symmetry plane. These operations on boundary face patches will

alter the numbering of patches. Therefore, the boundary face indexes used to specify boundary conditions and co-visualization will be modified to track these changes. The user is required to update the indexes in these namelists appropriately. The file `[project_rootname]_mirror*.mapbc` will be created in the current directory to aid this process.

The internally mirrored grid will be discarded when execution is complete. So, provide the same mirror command line option to any restarted executions. Alternatively, the `--write_mesh [new_project]` command line option is available to export the mirrored grid. Utilizing this exported grid would remove the need for the mirror command line option on subsequent runs.

5 Flow Solver, NODET

This chapter covers what is required to run an initial flow solution, how to restart a flow solution, and how to specify what outputs the solver NODET produces.

5.1 Flow Solver Execution

The grid and flow conditions are specified in the file `fun3d.nml`; see section B.4 for the file description. If you configured FUN3D without MPI, the executable is named `nodet`. If you configured FUN3D with MPI, the executable is named `nodet_mpi`. Configuration and installation is explained in detail in section A. The executable `nodet` can be invoked directly from the command line,

```
nodet [fun3d options]
```

but the MPI version `nodet_mpi` will need to be invoked within an MPI environment. The most common method is via

```
[MPI run command] [MPI options] nodet_mpi [fun3d options]
```

The details of the MPI run command and MPI options will depend on the MPI implementation. The MPI run command is commonly `mpirun` or `mpiexec`. The MPI options may contain the number of processors `-np [n]`, a machine file `-machinefile [file]`, or no local `-nolocal`. If a queuing system is used (e.g., PBS) this command will need to be run inside an interactive job or a script. See your MPI documentation or system administrator to learn the details of your particular environment.

If you have provided a grid with boundary conditions and `fun3d.nml`, you will then see the solver start to execute. If an unexpected termination happens during execution (e.g., `SIGSEGV`), especially during grid processing or the first iteration, you may need to set your shell limits to unlimited,

```
$ ulimit unlimited # for bash
$ unlimit          # for c shell
```

A detailed description of the output files is given below.

5.2 Command Line Options

These options are specified after the executable. The majority of the command line options are functionality under development and there is work underway to migrate command line options to namelists. Namelists are the preferred input method. Command line options should be avoided unless they are the only way to activate the functionality you require. These commands are always preceded by `--` (double minus). More than one option may appear on the

command line (each option proceeded by a `--`). You can see a listing of the available command line options in any of the codes in the FUN3D suite by using the command line option `--help` after the executable name,

```
./nodet_mpi --help
```

The options are then listed in alphabetical order, along with a short description and a list of any auxiliary parameters that might be needed, and then the code execution stops. Specific examples of the use of command line options are found throughout this, and later, chapters.

5.3 Output Files

These are the output files produced by the flow solver, NODET.

`[project_rootname].flow` This file contains the binary restart information and is read by the solver for restart computations. See the `restart_read` namelist variable in section B.4.13 to control restart behavior.

`[project_rootname]_hist.dat` This file contains the convergence history for the RMS residual, lift, drag, moments, and CPU time, as well as the individual pressure and viscous components of each force and moment. The file is in Tecplot™ format. See section B.4.25 for an improved method to track forces and moments.

`[project_rootname]_subhist.dat` For time accurate computations only. This file contains the sub-iteration convergence history for the RMS residuals, together with force and moment histories. Force and moment histories reflect the combined viscous and pressure components. The file is in Tecplot™ format and is overwritten each time the code is run.

`[project_rootname].forces` This file contains a breakdown of all the forces and moments acting on each individual boundary group. The totals for the entire configuration are listed at the bottom. See section B.4.25 for an improved method to track forces and moments.

5.3.1 Flow Visualization

There are six basic categories of output: boundary data, sampling data (on entities such as planes, boxes and spheres), volumetric data, slice data, and spatially averaged data controlled by the namelists in Table 8.

Each namelist has a corresponding frequency variable, A positive frequency will cause the output to be generated every frequency time step/iteration. A

Table 8: Solver output types.

Type	**Namelist**	
domain boundaries	`&boundary_output_variables`	section B.4.29
domain volume	`&volume_output_variables`	section B.4.28
boundary slices	`&slice_data`	section B.4.33
various geometries	`&sampling_parameters` and	section B.4.31 and
	`&sampling_output_variables`	section B.4.30
point	`&sampling_parameters` and	section B.4.31 and
	`&sampling_output_variables`	section B.4.30
spatially averaged profile	`&spatial_avg`	section B.4.32

negative frequency will cause output to be written only at the end of a run. A zero frequency (the default) with produce no output. See the corresponding namelist descriptions for details.

5.3.2 Flow Visualization Output From Existing Solution

If a Fun3D flow solution already exists, visualization files can be produced by setting `steps = 0` or `steps = 1` in the `&code_run_control` namelist (section B.4.13) and setting the `restart_read` variable to something other than `'off'`. One iteration is required to compute gradient quantities (i.e., skin friction). This will allow generation of visualization output without having to repeat the entire calculation.

6 Adjoint Solver, DUAL

This section describes how to execute the adjoint solver, DUAL, directly. Typically, DUAL is executed by scripts that manage the multiple steps required for design optimization (section 9) or grid adaptation (section 8). However, it may be necessary to run DUAL directly to diagnose problems or gain experience during setup including determining input parameters and termination strategies. FUN3D is configured to compile DUAL by default. While the adjoint method is available for most commonly used FUN3D capabilities, only a subset of FUN3D's full capabilities are implemented in the adjoint solver.

6.1 Convergence of the Linear Adjoint Equations

The adjoint solution is dependent on the primal flow solution (and the convergence of the primal flow equations). While the primal solution may have converged enough to give acceptable force and moment results, the flow residuals might still be large, which can cause the adjoint solution scheme to diverge. This divergence issue is most common in turbulent simulations. A divergent adjoint scheme can be improved in some circumstances with the `--outer_loop_krylov` command line option. It is critical to run the flow solver and the adjoint solver with the *same* governing equations and boundary conditions.

The scaling of the adjoint residuals is different from the flow residuals and is dependent on the choice of the adjoint cost functions. The number of iterations `steps` and the residual tolerance `stopping_tolerance` will need to be adjusted, see section B.4.13. The sensitivities should converge at the same rate as your functions (i.e., lift), but an adjoint with some algebraic error may still provide reasonable sensitivities for design and grid adaptation.

6.2 Required Directory Hierarchy and Executing DUAL

The executable `dual` can be invoked directly from the command line,

```
dual [fun3d options]
```

but the MPI version `dual_mpi` will need to be invoked within an MPI environment. The most common method is via

```
[MPI run command] [MPI options] dual_mpi [fun3d options]
```

Any `[fun3d options]` provided to NODET that control the flow solver residual will also be required for the adjoint solver for a consistent adjoint solution and solution scheme. See the flow solver execution instructions for more details, section 5.1.

DUAL expects the cost function description `../rubber.data` to be in the parent directory of the directory from which it is invoked. The input and flow restart files are shared with NODET in the directory `../Flow/`. The flow solver must be run to completion, to provide a flow restart file, before DUAL is invoked. See Table 9 for the required files and locations.

Table 9: Adjoint solver DUAL directory hierarchy.

Relative Path	Description
`../Flow/[project_rootname].flow`	Primal flow solution (restart)
`../Flow/fun3d.nml`	Main input namelist file
`../rubber.data`	Description of the adjoint cost function

6.3 `rubber.data`

The minimum required `rubber.data` for running the adjoint (and grid adaptation) can be written with the command

```
f3d function [cost function name]
```

Available cost function names are discussed in section 9.1 and listed in Table 10. See section 9.6.2 for complete details on this file format including the information required for design. The `rubber.data` reader requires the *exact* number of header lines. Be very careful when editing this file.

6.4 Output Files

The adjoint solver will export visualization files in the same manner as the flow solver when requested, see section 5.3.1.

`[project_rootname].adjoint` This file contains the binary restart information and is read by the and adjoint solver for restart computations.

`[project_rootname]_hist.tec` This file contains the convergence history for the RMS residual of the adjoint equations and CPU time. The file is in the same Tecplot™ format as the flow solver produces. History information is truncated when the adjoint solver is restarted.

7 Grid Motion

FUN3D has an extensive capability for grid motion. Grid motion may be rigid, where points in the grid move in unison, or grid motion may result from elastic deformation of the grid to follow the motion of one or more boundaries in the domain. To accommodate both types of grid motion, a distinction is made between 'body motion' and 'grid motion'. The user begins by defining one or more bodies (a *body* being a collection of one or more boundary patches in the grid), and specifies how that body is to move. This section describes how to specify the motion of each body as rigid motion, elastic motion, or a combination of rigid and elastic motions. The motion and deformation of volume grid surrounding the bodies is controlled through the concept of mesh movement (see section 7.2).

Motion requires the introduction of reference frames. FUN3D solves the flow equations in an inertial reference frame (one exception to this, section B.4.8, can not be used with grid motion). Each moving body has its own reference frame; the body frame is taken to coincide with the inertial reference frame at $t = 0$. In addition to the inertial and body reference frames that are automatically bookkept when grid motion is activated, the user may define an 'observer frame' for visualization output. Typically, the 'observer frame' is either the inertial frame (default) or one of the moving body frames. There is the provision for the observer frame to move independently, if required.

FUN3D allows for hierarchical (parent/child) body motions in which the motion of one body follows the motion of another body. The top level of these hierarchical motions is the inertial frame, and the default parent frame of any moving body is taken as the inertial frame (i.e., by default the motion of a body is assume to be relative to the inertial frame).

For all but a few specialized capabilities discussed below (see section 7.5), grid motion requires that FUN3D be executed in 'time-accurate' mode (see section B.4.14). To activate grid motion, the input variable `moving_grid = .true.` in the `&global` namelist is required. Finally, an additional input file, `moving_body.input`, is needed to establish the details of the motion (see section B.5).

Any grid motion that the user specifies *leaves the original grid file unaltered*. Grid motion always starts from the input grid set in the `&raw_grid` namelist (see section B.4.2). The FUN3D restart file contains enough information so that motion can be continued seamlessly through restarts. If the user would like to obtain a new grid file with the grid in its position at the end of the execution, use the command-line option `--write_mesh [new_project]`, where `[new_project]` is the project name of the new grid file. Note that regardless of the grid format of the original mesh, the new mesh format will be in AFLR stream format (`b8.ugrid`).

The distance function needed for any turbulence model is computed once

by default, based on the *input* grid. If the entire grid is moved rigidly, the distance function remains unchanged with motion. However, for deforming grids and (to a lesser extent) rigid overset grids, the distance from a point to the nearest surface may change to some extent as the grid is moved from the initial state. For deforming meshes, the grid points nearest to the surface behave as a nearly rigid grid, so the effect on the distance function is minimal. Currently, it is up to the user to decide if the extra cost of recomputing the distance function is justified. As defined in section B.4.27, setting `recompute_turb_dist = .true.` will force the distance function to be recomputed every `turb_dist_update_freq` time steps when grid motion is accomplished by deformation, or if overset grids are used. The distance function is never recomputed for rigid meshes that do not require overset connectivity. These same distance function considerations also apply to the specialized capabilities discussed in section 7.5.

7.1 Overview of `moving_body.input`

Moving-grid cases require the `moving_body.input` input file. Complete details are provided in section B.5 and an overview is proved here. Within this file, basic information required for all moving-grid cases is accomplished through the `&body_definitions` namelist (see section B.5.1). Depending on the the type of 'motion driver' selected (i.e. how the body is to be moved), additional namelist input is usually required. The `&forced_motion` namelist (See section B.5.2) allows the user to specify constant translation and/or rotational motion of a body. The `&motion_from_file` namelist (see section B.5.4) specifies body motion by providing a time sequence of 4×4 transform matrices, and is the most general means of specifying rigid-body motion. The `&observer_motion` namelist (see section B.5.3) allows the user to specify motion of an 'observer' reference frame. Visualization (see section 5.3.1) is in the 'observer' frame.

7.2 Choosing the Type of Mesh Movement

The user must choose a means to move the mesh that will accommodate the prescribed or calculated body motion. As described in section B.5.1, the choices are `mesh_movement = 'rigid'`, `mesh_movement = 'deform'`, or a combination of the two (e.g. `mesh_movement = 'rigid+deform'`. Whenever possible, the most robust and fastest executing option is 'rigid', since rigid motion is quickly and efficiently applied via a 4×4 transform matrix (see section 7.3) and is guaranteed to maintain positive cell volumes as the mesh is moved. Mesh deformation, on the other hand, increases the computational time as it requires the solution of an additional system of partial differential equations (linear elasticity). Furthermore, there is no guarantee of positive cell volumes after deformation. FUN3D will automatically try to fix negative vol-

umes during deformation, but this is rarely successful. Execution terminates when negative cell volumes are encountered and cannot be remedied.

Elastic body deformations preclude purely rigid grid motion (i.e., the body itself undergoing deformation, as occurs for aeroelastic bodies). However, some cases can benefit from the combination of rigid and deforming mesh motion. This can allows large-scale motion to be described as rigid motion and reduces the magnitude of the elastic deformation to smaller-scale motions. Reducing the magnitude of body elastic motions can reduce the cost of computing the elastic deformation of the adjacent volume grid. Smaller elastic deformations also increase the robustness by reducing the likelihood of generating negative volumes. An example of combined rigid and elastic deformation is a rotor blade of a rotorcraft simulation, where rigid motion is used to rotate the blades around the shaft axis and elastic deformation is used to deform the the blade under aerodynamic loading.

7.3 4×4 Transform Matrices

All rigid motions (body and/or grid) within FUN3D are accomplished via application of 4×4 matrices to describe affine transformations. [8] These transforms map a body/grid from the position at $t = 0$ to the current position at $t = T$. The inverse of these transforms are used to map a body/grid from its current position back to its position at $t = 0$. Although the user usually does not need to know the details of these transform matrices to use the grid motion capability in FUN3D, they are described below for reference.

The 4×4 transform matrices contain both translation and orthonormal rotation components. Given a point at an initial position $(x, y, z)^T$, application of the transform matrix moves the point to its new position $(x', y', z')^T$

$$\begin{bmatrix} x' \\ y' \\ z' \\ 1 \end{bmatrix} = \begin{bmatrix} R_{11} & R_{12} & R_{13} & T_x \\ R_{21} & R_{22} & R_{23} & T_y \\ R_{31} & R_{32} & R_{33} & T_z \\ 0 & 0 & 0 & 1 \end{bmatrix} \begin{bmatrix} x \\ y \\ z \\ 1 \end{bmatrix}$$

where the 3×3 submatrix entries in the upper left define an orthonormal rotation about the origin, $(0, 0, 0)^T$, and the last column defines a translation. The last row is always set as $(0, 0, 0, 1)^T$. Application of the inverse of this transform matrix moves the point back to the initial position.

Two often-encountered transforms are a pure translation from the origin to a point $(x_0, y_0, z_0)^T$ and a pure rotation θ in the direction $\hat{\mathbf{n}}$ (unit vector) about the origin

$$[\mathbf{T_0}] = \begin{bmatrix} 1 & 0 & 0 & x_0 \\ 0 & 1 & 0 & y_0 \\ 0 & 0 & 1 & z_0 \\ 0 & 0 & 0 & 1 \end{bmatrix}$$

$$[\mathbf{R_0}] = \begin{bmatrix} (1-c\theta){n_x}^2 + c\theta & (1-c\theta)n_x n_y - n_z s\theta & (1-c\theta)n_x n_z + n_y s\theta & 0 \\ (1-c\theta)n_x n_y + n_z s\theta & (1-c\theta){n_y}^2 + c\theta & (1-c\theta)n_y n_z - n_x s\theta & 0 \\ (1-c\theta)n_x n_z - n_y s\theta & (1-c\theta)n_y n_z + n_x s\theta & (1-c\theta){n_z}^2 + c\theta & 0 \\ 0 & 0 & 0 & 1 \end{bmatrix}$$

where $s\theta = \sin(\theta)$ and $c\theta = \cos(\theta)$. The right-hand rule in the direction of $\hat{\mathbf{n}}$ defines the sense of θ. Other forms of the 3×3 rotation submatrix may arise depending on how the motion is specified (e.g., chained rotations such as Euler angles). Note that $[\mathbf{T_0}]^{-1}$ is simply $[\mathbf{T_0}]$ with $(x_0, y_0, z_0)^T$ replaced by $(-x_0, -y_0, -z_0)^T$, and maps $(x_0, y_0, z_0)^T$ to the origin.

An extremely useful feature of the transform matrix approach is that multiple transformations telescope via matrix multiplication. Thus, rotation about a point $(x_0, y_0, z_0)^T$, by an angle θ, in the direction $\hat{\mathbf{n}}$ is effected by first translating to the origin, performing the rotation, and then translating back to $(x_0, y_0, z_0)^T$, which is accomplished via three matrix multiplications to give the complete transform matrix $[\mathbf{T}]$

$$[\mathbf{T}] = [\mathbf{T_0}][\mathbf{R_0}][\mathbf{T_0}]^{-1}$$

The telescoping property of the transform matrices is also useful for tracking motions of one body relative to another. For example, a wing may be translating up and down, while at the same time, a flap may be pitching about a hinge line fixed on the wing. It is natural to describe the pitching motion of the flap in its own coordinate system, which at t=0 is the same as the wing coordinate system. If the transform matrix describing the plunging of the wing relative to its initial position in an inertial reference frame is given by $[\mathbf{T}]_{\mathbf{wing}}$, and the transform matrix of the pitching motion of the flap relative to a hinge line defined in the flap coordinate system is given by $[\mathbf{T}]_{\mathbf{flap}}$, then the position of the flap, relative to the inertial frame, may by computed using the composite transform

$$[\mathbf{T}] = [\mathbf{T}]_{\mathbf{wing}}[\mathbf{T}]_{\mathbf{flap}}$$

The order of matrix multiplication is important: post multiplication of the parent transform takes coordinates from the child system into the parent system, which is then moved relative to the inertial frame according to the parent transform. The example above is for a simple, one-generation, parent-child composite motion, but the concept may be extended to any number of generations.

7.4 Verifying Grid Motion Inputs

When setting up a moving-grid case, it is usually a good practice to verify that the desired grid motion will be performed before an attempt is made with a large and potentially expensive time-dependent flow solution. There are two options that may be used to check that the motion setup is correct; both must be used in conjunction with boundary output to be useful (see section 5.3.1). Both options bypass the flow-solution but not the grid-motion mechanics. Because these options decouple the flow solution and the grid motion, they are generally restricted to cases in which the motion is prescribed by the user. If the motion results from aerodynamic loading, such six degrees of freedom motion or as a result of aeroelastic deformation, there is no complete check but to run the coupled simulation. However, it may be possible to prescribe a motion that is similar to the expected motion so that body definitions and time step sizes may be verified prior to the coupled solution.

The first option is enabled by setting `body_motion_only = .true.` in the `&global` namelist. As the name of the option implies, only the user-defined bodies are moved, not the entire mesh. This is the quickest check, especially for deforming meshes, since the elasticity equations are not solved. Volume and surface elements adjacent to the moving bodies will likely become inverted during this test. So, expect to see inverted elements in visualization of output grids on symmetry boundaries, farfield boundaries, sampling planes, etc.

The second option is more discriminating for deforming grids, and is enabled by setting `grid_motion_only = .true.` in the `&global` namelist. This option runs through the entire grid-motion mechanics, including solution of the linear elasticity equations for deforming grids. This will significantly increase the computational time for this check compared to `body_motion_only = .true.`. For deforming meshes, this option will indicate whether or not the mesh will survive the prescribed motion without negative volumes. All visualization options can be used with this option to observe the surface and volume grid deformation.

Because `body_motion_only = .true.` option is fairly quick even for deforming meshes, the recommended approach for deforming meshes is to do start with `body_motion_only = .true.` to verify that the body moves as desired. After the basic motion is verified, the `grid_motion_only = .true.` can be exercised, to ensure the deformation will be successful as the body executes its motion. Both body and grid motion are fast for rigid meshes.

For periodic motions it is strongly recommended to verify that the bodies return to their initial position after the expected number of time steps. Failure to return to the initial position at the expected time likely indicates an error in the input time step or the nondimensional frequency. Insufficient numerical precision of the input values of these quantities can prevent a return to the initial position after one period.

7.5 Static Grid Manipulations

Several options available to move or deform the grid during pre-processing are not considered 'moving grid' options. Therefore, these static grid manipulations do not require the code to be run in a time-accurate manner, the `moving_body.input` file, or `moving_grid = .true.` in the `&global` namelist. These static manipulations result in a one time movement of the mesh at the start of the code execution. As with moving grids, the original grid file specified in the `&raw_grid` namelist (see section B.4.2) remains unaltered. The `body_motion_only` or `grid_motion_only` options do not apply to these static grid manipulations. As for time-accurate moving grids, the rigid-grid option (`&grid_transform`) is preferred over the deforming grid option (`&body_transform`) whenever possible because it is less expensive and more robust.

7.5.1 Grid Transform

This static grid manipulation is governed by the `&grid_transform` namelist in the `fun3d.nml` file (see section B.4.4). It allows the *entire* grid to be rotated, translated, or scaled with a few simple inputs. A more general manipulation of the grid may be obtained through the input of a 4×4 transform matrix.

7.5.2 Body Transform

This static grid manipulation is governed by the `&body_transform` namelist in the `fun3d.nml` file (see section B.4.5). It allows user-defined bodies to be rotated or translated (but not scaled). An example would be to make a small change to the angle of a flap, while leaving the orientation of the wing unchanged. The namelist allows for one or more bodies to be defined as collections of one or more boundaries in the grid, where each body may be manipulated independently of the others. As with the `&grid_transform` option, a 4×4 transform matrix may be input if the simple rotation and translation options provided by the namelist input are insufficient to describe the transform. When this option is used, the specified bodies will be moved according to the input, and the mesh will be deformed to accommodate the new body positions.

7.5.3 Surface From File

This static grid manipulation is governed though the command line option `--read_surface_from_file`. When this command line option is used, a file with the new surface will be read and the mesh deformed to fit this new surface. This surface file must follow the naming convention of `[project]_bodyN.dat`, where `N` is the body number. By default `N=1` is assumed. The file must

be a formatted 'MASSOUD' file, which is a formatted Tecplot™ file of type 'FEPOINT', with variables x, y, z, and id, where id is the id of the surface point within the global mesh numbering system. Connectivity information is not required in the `[project]_bodyN.dat` file (any connectivity data in the file is not read by FUN3D); however, including the connectivity data will allow visualization of the surface with Tecplot™ to help ensure the surface is correctly defined and positioned. Should more than one body be necessary, use the `&massoud_output` namelist to specify the number of bodies, and the boundaries in the mesh that define those bodies.

8 Grid Adaptation

FUN3D implements metric-based adaptation, where grid adaptation is separated into two tasks. The first step is to construct a metric that describes the desired size and anisotropy of the adapted grid elements. The second step is to produce an adapted grid that is based on this metric.

Feature-based adaptation constructs the metric based on properties of the flow solution. Adjoint-based adaptation constructs the metric from the flow and adjoint solutions to reduce estimated errors in a specified output function. The namelist `&adapt_metric_construction` (section B.4.36) specifies the metric construction method. The related namelist description and documentation provides the mathematical formulation of the metric.

FUN3D supports a number of grid adaptation libraries. The namelist `&adapt_mechanics` (section B.4.37) specifies the grid adaptation library and its options. The REFINE grid adaptation library is distributed and installed with FUN3D by default.

8.1 Geometry Specification and Grid Freezing for REFINE

When adapting a grid with REFINE version one (`adapt_library = 'refine/one'` in `&adapt_mechanics`), all boundary faces must be specified as frozen or a geometry definition mush be provided via FAUXGeom. Use the default `patch_lumping='none'` in the `&raw_grid` namelist, as lumping will change boundary patch indexes making it more difficult to specify geometry.

8.1.1 No geometry, where the surface nodes are frozen.

REFINE version one cannot preserve the high aspect ratio structures within viscous layers, and so viscous layers must be frozen for a specified distance away from the surface to maintain grid quality. This is invoked with the `adapt_freezebl` command within the `&adaptation_mechanics` namelist, see section B.4.37 for more details and for guidance in specifying this distance.

Additionally, specific surfaces that do not have a viscous boundary condition can be frozen by listing the surface numbers (one per line) in a file named `[project_rootname].freeze`. For example, `[project_rootname].freeze` that contains

```
5
7
```

will freeze points on boundary patches 5 and 7. This is also useful for boundary surfaces that do not have an analytical definition handled by FAUXGeom.

8.1.2 FAUXGeom for Planar Boundaries

For viscous problems, where the mesh on the complex geometry of the body is frozen, FAUXGeom can be used to provide an analytical definition of planar symmetry, farfield, and propulsion boundary surfaces. This allows adaptation to occur on these planar surfaces of the mesh, even when the boundary layer mesh is frozen. This is a particularly important capability for symmetry planes. At present, FAUXGeom can only handle planar surfaces.

FAUXGeom reads the file `faux_input`. Here is an example file:

```
4
 5 xplane -5.0
 3 yplane -1.0
 1 zplane  1.0
16 general_plane 2.0
   0.707 0.707 0.0
```

The first line is how many faux surfaces are being defined. The subsequent lines have a face number, type of face, and a distance associated with the particular geometry. In this example, the first faux face defined corresponds to surface 5 in the mesh and is an $x = -5.0$ constant plane. Faux faces are similarly defined for the z and y planes of surfaces 3 and 1. Surface 16 is a plane perpendicular to a $(0.707, 0.707, 0.0)$ normal that is located 2.0 away from the origin in the direction of the normal; the plane passes through the point $(1.414, 1.414, 0.0)$.

8.2 Performing Feature-Based Adaptation

The `&adapt_metric_construction` variable `adapt_feature_scalar_form` defines the operator that is applied to the `adapt_feature_scalar_key` to compute an adaptation intensity. This intensity is raised to the `adapt_exponent` power to produce a scaling of an isotropic element size estimate on the current grid. The anisotropy of the metric is introduced by the Hessian of the `adapt_hessian_key` variable. See section B.4.36 for complete details and mathematical description.

Set `restart_read='on'` in section B.4.13 to read the flow solution. Run NODET with the `--adapt` command line option in the directory with the flow restart. The result will be a new grid and interpolated solution file with the `adapt_project` project name. After adaptation, the flow solver can now be restarted with this new grid and interpolated solution by changing the `project_rootname`.

8.3 Performing Adjoint-Based Adaptation

Adjoint-based adaptation requires that a flow solution be calculated in the `Flow` directory and an adjoint solution be calculated in the `Adjoint` directory. See section 6 for more information on obtaining an adjoint solution. The adjoint solution is based on the functional defined in `rubber.data` and this is the same functional targeted for grid adaptation.

Adaptation is performed by executing DUAL with the command line options `--rad --adapt`. The adjoint solver reads the `fun3d.nml` in the `../Flow` directory), so this is the place to specify `&adapt_metric_construction` and `&adapt_mechanics` options. The freeze and FAUXGeom files are read in the current directory, `Adjoint`.

The result will be a new grid and interpolated solution restart file in the `../Flow` directory and an interpolated adjoint restart in the `Adjoint` directory. The project name of these new files is `adapt_project`.

8.4 Scripting Grid Adaptation

The FUN3D installation includes the `f3d` Ruby script. To find the other components of the FUN3D suite, the `f3d` script expects to be in the `bin` directory of the FUN3D installation. Don't copy or link `f3d` from the `bin` directory. The input file `case_specifics` is described in section 8.4.1.

Execute the `f3d` script in a directory that contains all of the the input files (e.g., grid, `fun3d.nml`, `case_specifics`). The script will create the required `Flow` and `Adjoint` directories to run the case. It has the following commands,

```
usage: f3d <command>

  <command>       description
  ---------       -----------
  start           Start adaptation
  view            Echo a single snapshot of stdout
  watch           Watch the result of view
  shutdown        Kill all running fun3d and ruby processes
  clean           Remove output and sub directories
  function [name] write rubber.data with cost function [name]
```

The command `start` begins adaptation by launching a background job. The commands `view` and `watch` allow the adaptation progress to be monitored. (Use `Ctrl-C` to escape the `watch` command.) The `shutdown` command kills all Ruby (`f3d`) and FUN3D jobs. The `clean` command removes the `Flow` and `Adjoint` subdirectories and the `output` log file. The `function` command with argument creates the `rubber.data` file to define the adjoint cost function.

8.4.1 Input File `case_specifics` for `f3d` Script

The `f3d` script has one input file, named `case_specifics`. Here is an example

```
root_project ''
number_of_processors 2
mpirun_command 'mpiexec'
first_iteration 1
last_iteration 10
# Any text after a number sign is a comment.
```

where the defaults are listed. Adaptation will be performed from the first grid adaptation iteration 1 to the last grid adaptation iteration 10. The string in quotes next to `root_project` is the project root name. A two digit iteration number will be appended to it. The project name for the first adaptation will be `[root_project]01` and the last will be `[root_project]10`. All the files required to run NODET and DUAL should be provided in the current directory and the grid filename should include the root project name and iteration number, `[root_project]01`. `Flow` and `Adjoint` subdirectories are created by the script during execution, and the input files are placed in their correct location by the script.

Command line options can be passed to the codes via,

```
all_cl ' '
flo_cl ' '
adj_cl ' '
rad_cl ' '
```

where `all_cl` is provided to all codes, `flo_cl` is provided to NODET, `adj_cl` is provided to DUAL during the adjoint solve, and `rad_cl` is provided to DUAL during error estimation and adaptation. For example, the line

```
adj_cl ' --outer_loop_krylov '
```

turns on Krylov projection wrapping to stabilize the adjoint solve. Note that the command line arguments should be surrounded by spaces to avoid collisions during assembly.

The main input file `fun3d.nml` provided in the current directory can be modified by the following commands

```
all_nl['variable']= value
flo_nl['variable']= value
adj_nl['variable']= value
rad_nl['variable']= value
```

where `all_nl` changes `fun3d.nml` for all codes, `flo_nl` for NODET, `adj_nl` for DUAL during the adjoint solve, and `rad_nl` for DUAL during error estimation and adaptation. An example is

```
adj_nl['steps']=500
adj_nl['stopping_tolerance']=1.0e-12
```

where the termination criteria of the adjoint solver can be specified separately than the flow solver.

The `case_specifics` is actually executable Ruby code. This allows values to be computed or conditionally executed, but also requires nested quotes for character strings, e.g.,

```
rad_nl['adapt_complexity'] = 5000*iteration
number_of_processors 128 if (iteration>5)
all_nl['flux_construction'] = "'vanleer'"
```

8.5 Examining Convergence of the Adaptive Grid Process

For feature-based adaptation, there are no tools available to study the convergence of the adaptive grid process, only the solution, grid size, and functional output of the flow solver are available. The practitioner is left to examine the results and exercise engineering judgment.

For output-based adaptation, the items available for feature-based adaptation are augmented with a remaining error estimate and an error corrected functional for `adapt_error_estimation = 'embed'`. While the error corrected functional is printed to standard output for `adapt_error_estimation = 'single'`, it should not be used for monitoring, because it is correcting the algebraic error of the reconstructed solution (not the discretization error as in the embedded grid method).

The system `grep` command can be used to extract this information. For example the adapted grid size is

```
grep nnodesg Adjoint/*_rad_out
```

where the last argument is the file where standard output is stored. The remaining error estimate is extracted with

```
grep remaining_error Adjoint/*_rad_out
```

and both the linear and high order corrected functional is extracted with

```
grep function_corrected Adjoint/*_rad_out
```

where the linear is listed before the higher order. The higher order corrected functional is preferred to examine convergence, and the linear corrected function is provided to flag any problems with interpolation. Again, these error corrected functionals are not valid for `adapt_err_estimation = 'single'`.

8.6 Adaptive 2D Simulations

There are a number of considerations for performing grid adaptation of 2D geometries. A 3D grid should be used with one layer of spanwise prism elements between symmetry planes at $y = 0$ and $y = 1$. The adjoint solver lacks a 2D-specific mode, so set `twod_mode = .false.` in the `&raw_grid` namelist. To properly construct the metric from the 3D grid and solution, set `adapt_twod = .true.` in the `&adapt_metric_construction` namelist. An adaptation library that supports 2D should be selected from `adapt_library` in `&adapt_mechanics`.

9 Design Optimization

The Fun3D design framework uses a gradient-based optimization procedure. One potential approach to obtaining the required sensitivity derivatives is a conventional forward mode of differentiation, such as finite-differencing, complex-variable formulations, operator overloading, or direct differentiation. Since the cost of these techniques scales directly with the number of input parameters, these methods are most efficient for problems where the number of outputs is considerably larger than the number of inputs. For such problems, Fun3D provides a complex variable formulation as described in section 9.14. However, for most aerodynamic design problems, the converse is true; the number of design variables is typically much larger than the number of objective functions and/or constraints. In this context, an adjoint, or reverse mode of differentiation is preferred.

Fun3D provides a discrete adjoint capability to efficiently determine the sensitivities required by a gradient-based design procedure. The adjoint approach enables the user to compute sensitivity derivatives of an output function with respect to an unlimited number of design variables at a cost equivalent to a single additional flow solution. For a general review of sensitivity analysis techniques, see [9] and [10].

The adjoint approach used in Fun3D relies on discrete linearizations of the relevant components of the flow solver. Most of Fun3D's compressible perfect gas and incompressible capabilities are accounted for within the adjoint-based framework. Discretely consistent sensitivities have been demonstrated for both steady and unsteady inviscid, laminar, and turbulent flows based on the one-equation model of Spalart and Allmaras. Grid topologies may contain any combination of element types and may also contain overset grid discretizations. Grids may be static, non-inertial, or may contain any combination of static, rigidly-moving, or deforming overset component grids. Both compressible and incompressible formulations are available. The most commonly-used boundary conditions are implemented in the adjoint framework, and a broad range of objective/constraint functions is also available. However, the user is encouraged to review the latest release notes or contact `Fun3D-Support@lists.nasa.gov` to determine if a specific analysis capability is currently supported by the adjoint implementation. For a detailed overview of the adjoint-based procedure used in Fun3D and examples of its use for design optimization, see [11] and the references contained therein.

Users are encouraged to gain extensive experience using Fun3D for analysis purposes before attempting design optimization. This experience will aid in properly setting up optimization cases, understanding the steps involved, and interpreting the results.

The adjoint-based algorithms are very efficient, but a typical optimization will still require the equivalent of $\mathcal{O}(20)$ typical analyses. Therefore, secur-

ing sufficient computational resources is critical to performing realistic high-fidelity design. It should also be noted that the various optimization packages supported by FUN3D may behave very differently for a given design problem; moreover, the optimal algorithm is generally problem-dependent.

At this time, the documentation provided here is aimed at design optimization of steady flows. The extension to simulations involving unsteady flows is available for general use (e.g., see [12]), but is not currently covered here. Please contact `Fun3D-Support@lists.nasa.gov` if interested in using this capability.

9.1 Objective/Constraint Functions

To perform a gradient-based optimization, the user must specify at least one objective function to quantify the merit of the configuration. In the FUN3D design infrastructure, such objective functions may take a very general form as described here. Note that all of the supported optimization packages always seek to *minimize* the chosen objective function. Care should be taken to pose the objective function accordingly. Multiple outputs may be accounted for in a variety of ways. Constraints may be included implicitly within the objective function(s) as penalty terms. Explicit constraint functions may also be posed, as either equality or inequality constraints.

Note that the primary limitation in posing the problem statement is the general ability of the chosen optimization package to handle the design problem posed by the user. For example, the PORT optimization software does not support the use of explicit constraints. KSOPT is the only supported optimization package that supports the use of more than one objective function; however, FUN3D offers several approaches to scalarize multiple objectives for other packages. Multi-point design is also supported in several forms. See section 9.9 and section 9.10 for specific details on these capabilities.

The FUN3D flow and adjoint solvers do not distinguish between objective functions and constraints. The solvers themselves merely provide function values and their sensitivities for use during the optimization procedure. The actual optimization packages are the only components in the design framework that make a distinction between objective functions and constraint functions.

9.1.1 Terminology

It is useful to establish some basic terminology when composing the design problem statement. Within the FUN3D design infrastructure, the user specifies one or more *component* functions based on typical solver outputs. These *component* functions are then combined to form a single *composite* function. Multiple *component* functions may be used to form *composite* functions, and in turn, multiple *composite* functions may ultimately be specified. The user then

classifies each *composite* function, designating it either an objective function or a constraint function. Again, this distinction is solely for the optimization algorithm; FUN3D simply evaluates and linearizes each of the *composite* functions in a generic sense and provides them to the optimization scheme.

The adjoint formulation requires a separate adjoint solution for each composite function. For example, a drag-minimization problem with an explicit lift constraint will generally require two adjoint solutions at each step of the design procedure (one based on drag and one based on lift). Rather than performing separate adjoint executions for each function, FUN3D's adjoint solver is implemented such that multiple adjoint solutions may be computed simultaneously by cycling through a series of right-hand side vectors. In this manner, much of the computational overhead associated with discretizing the adjoint system is amortized over the collection of specified functions, and each additional function only increases the overall computational cost by approximately 40%. See [7] for further details on this aspect of the implementation.

9.1.2 Functional Form

Composite functions take the following general form in FUN3D:

$$f_i = \sum_{j=1}^{J_i} \omega_j (C_j - C_j^*)^{p_j} \tag{1}$$

Here, the index J_i corresponds to the number of individual component functions comprising composite function i. The factor ω_j represents a user-specified weighting coefficient in the summation; C_j is a FUN3D scalar output quantity, C_j^* is a user-specified target value for that output quantity, and p_j is a user-specified exponent. The currently available FUN3D output functions that may be posed as C_j are listed in Table 10. Though not explicitly represented in Eq. 1, the implementation also allows the user to only use specific boundary contributions to C_j and not all boundaries if desired. This could be used to focus the optimization function on forces acting on the wing or tail only. Note that when composing an objective or constraint function it is often helpful to scale the expected value to an $\mathcal{O}(1)$ quantity. This can be readily done using the ω_j factor. Additional details relevant to more complex functions are covered in section 9.2. The specific input mechanism for providing each of the component/composite function parameters will be discussed at length in section 9.6.2.

To demonstrate the use of the general functional form given by Eq. 1, several examples are given here:

Unconstrained Drag Minimization For an unconstrained problem in which the user wishes solely to minimize drag, one potential approach might

Table 10: Objective/constraint component function keywords.

Keyword	Function
`cl`, `cd`	Lift, drag coefficients
`clp`, `cdp`	Lift, drag coefficients: pressure contributions
`clv`, `cdv`	Lift, drag coefficients: shear contributions
`cmx`, `cmy`, `cmz`	x/y/z-axis moment coefficients
`cmxp`, `cmyp`, `cmzp`	x/y/z-axis moment coefficients: pressure contributions
`cmxv`, `cmyv`, `cmzv`	x/y/z-axis moment coefficients: shear contributions
`cx`, `cy`, `cz`	x/y/z-axis force coefficients
`cxp`, `cyp`, `czp`	x/y/z-axis force coefficients: pressure contributions
`cxv`, `cyv`, `czv`	x/y/z-axis force coefficients: shear contributions
`powerx`, `powery`, `powerz`	x/y/z-axis power coefficients
`clcd`	Lift-to-drag ratio
`fom`	Rotorcraft figure of merit
`propeff`	Rotorcraft propulsive efficiency
`rtr_thrust`	Rotorcraft thrust function
`pstag`	RMS of stagnation pressure in cutting plane disk
`distort`	Engine inflow distortion
`boom_targ`	Near-field p/p_∞ pressure target
`sboom`	Coupled sBOOM ground-based noise metrics
`ae`	Supersonic equivalent area target distribution
`press_box`	RMS of pressure in user-defined box, also pointwise dp/dt, $d\rho/dt$
`cpstar`	Target pressure distributions

be to specify a single composite function consisting of a single component function with $\omega_1 = 1.0$, $C_1 = \texttt{cd}$, $C_1^* = 0.0$, and $p_1 = 2$. In this manner, the objective function is simply

$$f = C_D^2, \tag{2}$$

where the quadratic form has been chosen to provide a convex function space.

Drag Minimization with Lift Penalty To add an interior penalty term accounting for a lift equality constraint of 0.5, one might instead use two component functions within the same single composite function where $\omega_1 = 10.0$, $\omega_2 = 1.0$, $C_1 = \texttt{cd}$, $C_2 = \texttt{cl}$, $C_1^* = 0.0$, $C_2^* = 0.5$, and $p_1 = p_2 = 2$. These parameters yield

$$f = 10C_D^2 + (C_L - 0.5)^2. \tag{3}$$

In this case, any deviation of the lift coefficient from its target value of 0.5 will "penalize" the objective function. The weighting parameters ω_j have been selected based on typical magnitudes of C_D and C_L, so as to produce roughly equivalent contributions to the objective function. Note that the choice of these weighting parameters is heuristic in nature and often troublesome in practice.

Drag Minimization with Explicit Lift Constraint In this example, the lift constraint $C_L = 0.5$ is instead posed as an explicit constraint for the optimizer. Here, two composite functions are formed, each with a single component function. First, an objective function is specified as in Eq. 2 with $\omega_1 = 1.0$, $C_1 = \texttt{cd}$, $C_1^* = 0.0$, and $p_1 = 2$. As before, this yields

$$f_1 = C_D^2. \tag{4}$$

However, an additional composite function for the lift constraint is also specified with $\omega_1 = 1.0$, $C_1 = \texttt{cl}$, $C_1^* = 0.5$, and $p_1 = 1$, which gives

$$f_2 = C_L. \tag{5}$$

This explicit form of the lift constraint is generally preferred in practice.

9.2 Some Details on Specific Objective/Constraint Functions

Many of the scalar functions shown in Table 10 and designed to be used as the term C_j in Eq. 1 are straightforward. For example, the keyword `cd` is sufficient to characterize a drag-based component function. However, some of the scalar functions listed in Table 10 require the user to be aware of specific requirements and/or to provide additional auxiliary data. In this section, scalar functions requiring further data and/or explanation are covered.

9.2.1 Lift-to-Drag Ratio (Keyword: `clcd`)

This function must be specified with a `0` for its boundary index, i.e., it must be applied to the entire configuration and is not available for individual boundary patches. It is defined as

$$f = \frac{C_L}{C_D}. \tag{6}$$

9.2.2 Rotorcraft Figure of Merit (Keyword: `fom`)

This function is defined as

$$f = \frac{C_L^3}{2C_{M_z}^2}. \tag{7}$$

Note that this functional form assumes that the rotor axis of rotation is in the $+z$ direction. The definition also represents the square of the traditional Figure of Merit function. See [13] for a motivation for this modified form. This function must be specified with a `0` for its boundary index, i.e., it must be applied to the entire configuration and is not available for individual boundary patches.

9.2.3 Rotorcraft Propulsive Efficiency (Keyword: `propeff`)

This function is defined as

$$f = \frac{-C_z}{C_{M_z}}. \tag{8}$$

Note that this functional form assumes that the rotor axis of rotation is in the $+z$ direction. The minus sign has been introduced to yield a positive efficiency since C_{M_z} is negative. This function must be specified with a `0` for its boundary index, i.e., it must be applied to the entire configuration and is not available for individual boundary patches.

9.2.4 Rotorcraft Thrust (Keyword: `rtr_thrust`)

This function is defined as the force normal to the plane of a rotor system:

$$f = C_L \cos(\theta_T) - C_D \sin(\theta_T) \tag{9}$$

where the angle from $+z$-direction θ_T in radians is the variable `thrust_angle` that must be set in the source file `LibF90/custom_transforms.f90`.

9.2.5 RMS of Stagnation Pressure (Keyword: `pstag`)

This function computes the RMS of stagnation (total) pressure in a circular disk that passes through the grid in a specified location and orientation. This is commonly employed to quantify engine inlet distortion. The user must specify the variables in the `&pstag_function` namelist within `fun3d.nml`. See section B.4.43 for details related to this namelist. This function is only available for compressible flows.

9.2.6 Engine Inflow Distortion (Keyword: `distort`)

This function provides a metric for quantifying inflow distortion at the fan face of an aircraft engine. A circumferential sector of a specified angle is incrementally rotated about the center of the fan face to locate the sector with the smallest average value of total pressure. The function is defined as

$$f = \frac{\bar{p}_t - \bar{p}_{t,min}}{\bar{q}} \tag{10}$$

where $\bar{p}_t$ and $\bar{q}$ are the average total pressure and average dynamic pressure over the entire fan face, respectively; and $\bar{p}_{t,min}$ is the average total pressure in the circumferential sector with the minimum value. For further details on the background of this approach, see [14].

The user must specify the sector and incremental angles in the `&fan_distortion` namelist within `fun3d.nml`, and the averaging performed in Eq. 10 may be

weighted using either area or mass flow. See section B.4.44 for details related to these namelist inputs. Any number of engine faces may be accommodated, with each appearing as a component function within one or more composite functions. Each engine face must appear as a single boundary patch in the mesh, and the patch number must be specified in the first column of data associated with the relevant component function (see section 9.6.2).

When FUN3D evaluates objective or constraint functions involving this metric, two files will be written for each specified fan face. The file `[project]_distortion.i.dat` provides the value of average total pressure in each sector as a function of the sector angle Θ in Tecplot™ format for the i-th fan face specified in `rubber.data` (see section 9.6.2). Similarly, the file `[project]_worstsector.i.dat` provides Tecplot™ geometric line data indicating the $\Theta = 0°$ direction in black and the sector corresponding to $\bar{p}_{t,min}$ in red for the i-th fan face. This data may be superimposed on contour plots of the fan face solution to assist in visualizing the distortion field. An example of such data is shown in the figure below. The angle Θ is measured counterclockwise when looking into the engine.

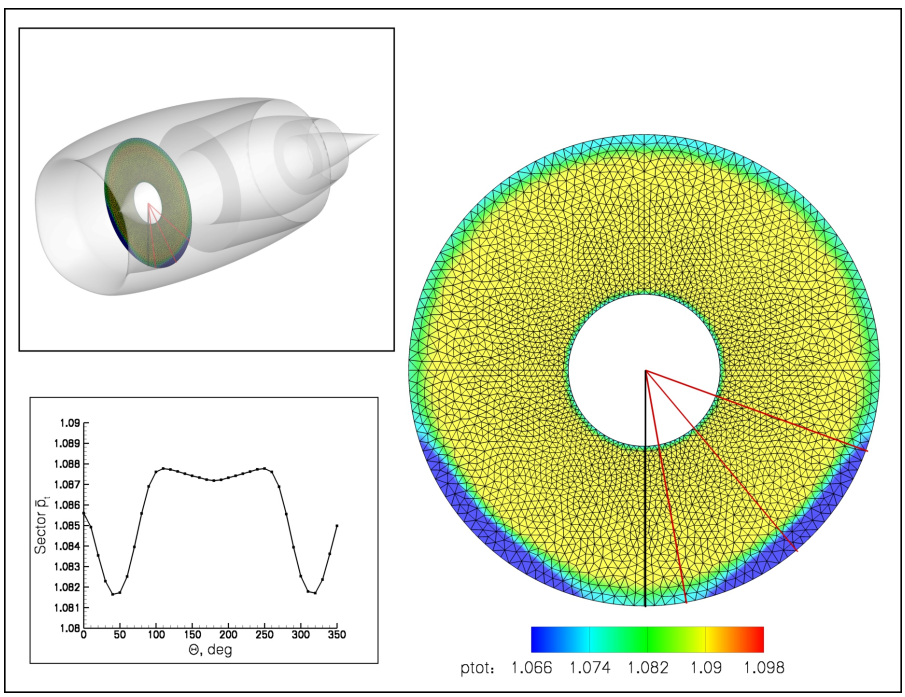

Figure 5: Contours of total pressure on an engine fan face. Black line represents $\Theta = 0°$ and red lines represent centerline and boundaries of the 60° sector with minimum average total pressure.

The current implementation of this function requires that each fan face remain static, and may not move as a result of kinematics, aeroelasticity, changes due to design optimization, or any other mechanism. Fan face patches

are assumed to be circular and planar, but may lie in any general orientation. A fan face may be cut by at most a single symmetry plane. This function is only available for compressible flows.

9.2.7 Near-field p/p_∞ Pressure Target (Keyword: `boom_targ`)

This function allows inverse design of near-field pressure signatures, which is a commonly used tactic for creating low sonic boom configurations. This function is only available for compressible flows. The user specifies `yz`-coordinate pairs through which rays are passed parallel to the `x`-axis. Off-body pressure distributions in the vicinity of an aircraft are nominally oriented parallel to the freestream velocity vector. In the case of a nonzero angle of attack, the rays are rotated about a user-specified center of rotation to align them with the freestream direction. The user also provides the minimum and maximum `x`-extent for the rays. A user-specified number of points are evenly distributed along each ray and the grid element containing each point is identified. See section B.4.39 for guidance on the required namelist inputs.

The functional form is given by

$$f = \sum_{i=1}^{N} \omega_i \left(\left.\frac{p}{p_\infty}\right|_i - \left.\frac{p}{p_\infty}\right|_i^* \right)^2 \tag{11}$$

where p is the local static pressure. The summation takes place over all points in the rays defined by the user, and the values of p are evaluated at the centroids of the enclosing elements. The values of ω_i and $\left.\frac{p}{p_\infty}\right|_i^*$ are user-supplied pointwise weighting coefficients and target values of p/p_∞, respectively, which must be provided in a file named `pressure_target.dat`. If this file is not present, the target values of p/p_∞ are set to 1.0 and the weighting coefficients are set to 1.0. Note that with the above functional form, the target and exponent parameters present in Eq. 1 are usually set to `0.0` and `1`, respectively.

A template for `pressure_target.dat` is typically generated by first extracting a set of p/p_∞ distributions for a known configuration by running the optimization driver with `what_to_do = 1` in the `design.nml` `&design` namelist, see section 9.5.1. Note that the input value `weight` must be set to `.true.` and the desired ray extraction (y, z) coordinate pairs must be specified in the `&sonic_boom` namelist in `fun3d.nml`. This operation produces a file named `pressure_signatures.dat`, which uses the same file format intended for the `pressure_target.dat` target input file. (Note that the file format is amenable to Tecplot™ usage.) The user may then use the `pressure_signatures.dat` file to develop a `pressure_target.dat` input file by modifying the existing pressures to reflect their target values as desired. Note that by specifying `weight=.true.` in the `&sonic_boom` namelist, a column of data representing pointwise weighting coefficients (all initially set to `1.0`) will be provided in

pressure_signatures.dat. This column of data is required to be present in pressure_target.dat. The individual weights may be left as 1.0, or they may be modified on an individual basis to optionally weight a specific region of the signature more or less in the final objective function. A brief example of this file format for a case involving two off-body signatures is shown below. Note that target distributions need not have the same number of locations as, nor line up with, the eventual sampling locations along the extraction rays. Fun3D will linearly interpolate between input target values to obtain values at the sampling locations.

```
VARIABLES = "x", "y", "z", "p/pinf", "weight"
zone t="Signal 1"
  -0.500E+01 0.100E-11 0.826E+00 0.110010E+01 0.100E+01
  -0.472E+01 0.100E-11 0.835E+00 0.110011E+01 0.100E+01
  -0.415E+01 0.100E-11 0.855E+00 0.110012E+01 0.100E+01
  -0.354E+01 0.100E-11 0.876E+00 0.110016E+01 0.100E+01
zone t="Signal 2"
  -0.500E+01 0.100E-11 0.182E+01 0.102008E+01 0.100E+01
  -0.472E+01 0.100E-11 0.183E+01 0.102008E+01 0.100E+01
  -0.414E+01 0.100E-11 0.185E+01 0.102009E+01 0.100E+01
  -0.356E+01 0.100E-11 0.187E+01 0.102012E+01 0.100E+01
  -0.335E+01 0.100E-11 0.188E+01 0.105013E+01 0.100E+01
  -0.320E+01 0.100E-11 0.188E+01 0.105014E+01 0.100E+01
  -0.264E+01 0.100E-11 0.190E+01 0.105017E+01 0.100E+01
```

9.2.8 Coupled sBOOM Ground-Based Signatures, Noise Metrics, and Equivalent Areas (Keyword: sboom)

This option uses the adjoint capability of the Burgers equation boom propagation code sBOOM [15] to inversely design ground pressure signatures, optimize a ground-based noise metric, or match equivalent area distributions. [16–18] Fun3D must be configured and built with the sBOOM library as described in section A.8.14 to use this capability.

In the coupled Fun3D-sBOOM implementation, Fun3D is responsible for computing pressure signals in the immediate vicinity of an aircraft (typically within 10 body lengths). The sBOOM tool then propagates these disturbances to the ground using an augmented Burgers equation that considers effects such as non-linearity, thermo-viscous absorption, and any number of molecular relaxation phenomena during the propagation of waveforms through the atmosphere. In this manner, the user can directly simulate ground-based noise metrics such as A-weighted loudness or compute other loudness measures (e.g., Perceived Level) from the computed ground signatures. In a similar fashion, a coupled adjoint problem is used to determine the discrete sensitivities of the ground-based metrics with respect to any of Fun3D's typical design parameters which may then be used to optimize the configuration.

sBOOM can generate off-track signatures based on ray theory using user input azimuthal angles. sBOOM can also predict the sonic boom signatures in the presence of wind, turn rate (changing heading angle), climb rate, climb angle, and acceleration (dMach/dt). During maneuvering flight, boom focusing is possible. The current version sBOOM in not able model focusing and will exit with an appropriate message if focusing occurs.

Equivalent area distributions are computed with reversed augmented Burgers equation (when `rs`< (`alt−hg`)) or a direct conversion of off-body pressures (when `rs`> (`alt−hg`)). This is different than the Mach cut equivalent area matching approach in section 9.2.9. The discrete sensitivities of the difference between a target and the computed equivalent areas are provided to Fun3D. The target area is specified with the `target_dpress` and `target_xx` variables in the `&sboom` namelist.

The user must provide inputs relevant to the nearfield pressure signal extraction (see section B.4.39) as well as parameters specific to the sBOOM library (see section B.4.40). Note that when the `sboom` keyword is used as the component function name, the actual form of the objective/constraint component function is determined entirely within sBOOM. In this case, the values of ω, C^*, and p in Eq. 1 are ignored. This function is only available for compressible flows.

9.2.9 Supersonic Mach Cut Equivalent Area Distribution (Keyword: `ae`)

This function aims to match a target Mach cut equivalent area distribution for supersonic flows. The Mach cut equivalent area distribution is directly computed from surface pressures and geometry for this function. This is a different approach than the equivalent area computation of sBOOM in section 9.2.8. The function is defined as

$$f = \sum_{i=1}^{N} \omega_i (L_i + V_i - A_i^*)^2 \tag{12}$$

where N represents the total number of longitudinal stations used to sample the solution and geometry for the current azimuth, and L_i and V_i are the lift and volume contributions, respectively, to the current equivalent area. The term A_i^* represents the user-supplied target equivalent area distribution. The ω_i enables the user to locally weight individual segments of the distribution if desired. Note that with the above functional form, the target and exponent parameters present in Eq. 1 are usually set to `0.0` and `1`, respectively. This function is only available for compressible flows, and the configuration is assumed to align with the `x`-axis.

Any number of desired azimuthal (centerline/off-track) locations may be specified and used as individual component functions. The user must pro-

vide the data indicated in the `&equivalent_area` namelist in `fun3d.nml` as described in section B.4.41. A centerline symmetry plane may be used to reduce computational expense; in this case, the cutting planes at each longitudinal station will be correctly accounted for on the virtual side of the aircraft. A file `ae_target.dat` must also be provided, which describes the (optionally weighted) target equivalent area profiles.

A template for `ae_target.dat` is typically generated by first extracting a set of equivalent area distributions for a known configuration by running the optimization driver with `what_to_do = 1` in the `design.nml` `&design` namelist, see section 9.5.1. This operation will produce a Tecplot™ file `[project_rootname]_ae.dat` which uses the same file format intended for the target input file `ae_target.dat`. The user may then use the `[project_rootname]_ae.dat` file to develop a `ae_target.dat` input file by modifying the existing equivalent areas to reflect their target values as desired. Note that the file `[project_rootname]_ae.dat` contains a column of data representing the pointwise weighting coefficients ω_i (all initially set to `1.0`). This column of data is required to be present in `ae_target.dat`. The individual weights may be left as `1.0`, or they may be modified on an individual basis to optionally weight a specific region of the distributions more or less in the final objective function. A brief example of this file format for a case involving three azimuthal signatures is shown below. Note that target distributions need not have the same number of locations as, nor line up with, the longitudinal sampling locations. Fun3D will linearly interpolate between input target values to obtain values at the sampling locations. Also note that in the input file `ae_target.dat`, the second and third columns of the format are ignored.

```
VARIABLES = "x", "V", "L", "Ae", "weight"
zone t="Ae Function 1"
  -0.01000E+00  0.00000E+00  0.00000E+00  0.00000E+00  0.10000E+01
   0.13839E+01  0.25482E-01 -0.26289E-02  0.22853E-01  0.10000E+01
   0.27678E+01  0.47548E-01 -0.64155E-02  0.41133E-01  0.10000E+01
   0.41517E+01  0.76165E-01 -0.10361E-01  0.65804E-01  0.10000E+01
zone t="Ae Function 2"
  -0.01000E+00  0.00000E+00  0.00000E+00  0.00000E+00  0.10000E+01
   0.14018E+01  0.25700E-01 -0.26610E-02  0.23039E-01  0.10000E+01
   0.28036E+01  0.48215E-01 -0.64628E-02  0.41752E-01  0.10000E+01
   0.42054E+01  0.77379E-01 -0.10358E-01  0.67020E-01  0.10000E+01
   0.56072E+01  0.11457E+00 -0.14045E-01  0.10052E+00  0.10000E+01
   0.98126E+01  0.30728E+00 -0.25726E-01  0.28156E+00  0.10000E+01
zone t="Ae Function 3"
  -0.01000E+00  0.00000E+00  0.00000E+00  0.00000E+00  0.10000E+01
   0.14155E+01  0.26009E-01 -0.26166E-02  0.23392E-01  0.10000E+01
   0.28310E+01  0.48902E-01 -0.62883E-02  0.42614E-01  0.10000E+01
   0.42465E+01  0.78591E-01 -0.10011E-01  0.68579E-01  0.10000E+01
```

Finally, the solver will also provide the user with a Tecplot™ output file `[project_rootname]_ae_cuts_i.dat` for the `i`th specified equivalent area func-

tion. These files contain the actual cross-sectional slices of the aircraft that were generated for each azimuthal function.

9.2.10 RMS of Pressure in User-Defined Box, Pointwise dp/dt, $d\rho/dt$ (Keyword: `press_box`)

This function computes the RMS of a quantity in Cartesian region, which is typically used to indicate a region of the flow is important for grid adaptation or that fluctuations in a region should be minimized in a design. These functions rely on the inputs associated with the `&press_box_function` namelist; see section B.4.42 for details. The function may be composed of the RMS value of the pressure within a user-defined box in the domain, or for unsteady simulations, the time derivative of pressure or density (for compressible flows) at a single grid point.

9.2.11 Target Pressure Distributions (Keyword: `cpstar`)

Fun3D has an inverse design capability where the objective function may be composed of target pressure distributions. The file containing the `j`th target distribution must be named `cpstar.data.j`. However, setup is tedious, primarily due to the difficulty in specifying pressure distributions on a three-dimensional configuration. If this capability is of interest, please contact `Fun3D-Support@lists.nasa.gov` for more detailed guidance.

9.3 Geometry Parameterizations

In order to perform shape optimization, Fun3D must be provided with a set of design variables describing the geometric shape of the configuration. Fun3D is currently set up to interface directly with geometry parameterizations provided by MASSOUD [19], Bandaids [20], or Sculptor™. MASSOUD and Bandaids are software packages developed by Jamshid Samareh of NASA Langley. Users may contact `Fun3D-Support@lists.nasa.gov` for copies of the software; tutorial information for these tools is available on the Fun3D website. These packages allow the user to parameterize completely arbitrary shapes using a free-form deformation technique. The packages are very efficient, robust, and also provide analytic Jacobians of the parameterization, which are necessary for Fun3D-based design. Sculptor™ is a popular commercial package developed by Optimal Solutions and also provides the necessary data for Fun3D-based design. Note that any combination of parameterizations based on these tools may be used within the context of a single optimization. For example, the planform of a wing or tail surface may be best treated using MASSOUD, while Bandaids or Sculptor™ may be most appropriate for a wing-body fillet region or a feature such as a fuselage protuberance. Finally, the user may also

use a parameterization scheme of their choosing; see section section 9.3.4 for further details.

9.3.1 Surface Grid Extraction

To parameterize a surface grid using any of the above tools, it must first be extracted to a Tecplot™ file. To do this, add a `&massoud_output` namelist to `fun3d.nml` to group all of the required boundary patches for a body to be parameterized into a single body (see also section B.4.38):

```
&massoud_output
  n_bodies = 2                  ! parameterize 2 bodies: wing and tail
  nbndry(1) = 6                 ! # of bounds that comprise wing
  boundary_list(1) = '3-8'      ! wing bounds (account for lumping!)
  nbndry(2) = 3                 ! # of bounds that comprise tail
  boundary_list(2) = '9,10,12' ! tail bounds (account for lumping!)
/
```

Note that the boundary indices shown here must reflect any patch lumping that may have been requested in the `&raw_grid` namelist (see also section B.4.2). A single iteration of the flow solver should now be executed with the `--write_massoud_file` command line option. This will generate a `[project_rootname]_massoud_bndry#.dat` file for each of the boundary groups present in the `&massoud_output` namelist. These files contain the information necessary to parameterize the surface grid using any of the aforementioned tools. See the documentation for those packages for further instructions on how to construct the actual parameterization.

9.3.2 Access to Executables

If MASSOUD, Sculptor™, or a user-defined executable is being used for parameterizations, the executable for those packages must be available in the runtime `PATH`. The executables for MASSOUD and Sculptor™ must be named `massoud` and `sculptor`, respectively. If using a user-defined parameterization package (see section 9.3.4), the executable must be named according to the input provided in the `&design` namelist in `design.nml` (see section 9.5.1). The optimization driver supplied with Fun3D will attempt to call these executables if such parameterization types are present. If Bandaids are being used, no additional executables must be supplied; all Bandaid evaluations are handled internally by Fun3D.

9.3.3 Notes on Using Sculptor™

If Sculptor™ is being used, Fun3D will invoke Sculptor™ in batch (non-GUI) mode during the course of the optimization. However, current versions of

Sculptor™ will still attempt to communicate with an X server, even when run in this fashion. If the system does not run an X server (such as compute nodes on a cluster), then a fake X server such as `Xvfb` is recommended. You will need to execute the fake server prior to running the design optimization. For example, a run script may have the following commands:

```
Xvfb :1 &
export DISPLAY=:1.0 # for bash
setenv DISPLAY :1.0 # for c shell
[any command that uses Sculptor]
```

The syntax here may vary; if this does not allow the optimization driver to run Sculptor™ in batch mode successfully on the system, the user should get in touch with Sculptor™ support for assistance.

In addition, the parameterization of all bodies treated using Sculptor™ must be bookkept within a single set of Sculptor™ input files. For example, in the wing-tail example above, both bodies must be contained in a single instance of Sculptor™ files. Therefore, the `&massoud_output` namelist described above should group all of the desired boundaries necessary to describe the geometry(s) of interest into a single body:

```
&massoud_output
  n_bodies = 1                 ! wing and tail grouped into a body
  nbndry(1) = 9                ! # of tail and wing bounds
  boundary_list(1) = '3-10,12' ! wing and tail boundaries
/
```

Each of the desired bodies may be worked on independently within Sculptor, but they must ultimately appear as a single body to Fun3D.

9.3.4 Using Other Parameterization Packages

Fun3D provides a generic interface for user-defined external geometric parameterization packages. The user-defined tool must provide the surface mesh coordinates as a function of some vector of design variables for the body of interest. The partial derivatives of these coordinates with respect to the design variables must also be supplied. See [21] for an example of such an approach.

To invoke a user-defined parameterization package for one or more bodies present in the simulation, the user must tag individual bodies appropriately (see section 9.6.2) and provide the executable name to be invoked by Fun3D's design driver at run-time via the `&design` namelist in `design.nml` (see section 9.5.1). This may be a binary executable or simply a script that invokes other user-defined operations that may be necessary to evaluate the parameterization and its sensitivities.

When Fun3D requires an evaluation of the user-defined parameterization for a body (or its sensitivities), it will first write a file named `customDV.i`, where the `i` suffix corresponds to the body index for which Fun3D is requesting updated surface data. The format of the `customDV.i` file is as shown below.

```
#User defined design variables
#Number of DVs
         3
  1.907460000000000E+00
  0.000000000000000E+00
 -0.002469800000000E+00
```

The first two lines are comment lines, and the third specifies the total number of design variables in the parameterization for the current body (whether the user may have designated some active and others inactive in `rubber.data`; see section 9.6.2). The remaining lines in the file contain the current value of each design variable, with one value per line.

After writing the `customDV.i` file, Fun3D will then invoke the user-specified executable command. Fun3D will append a space and a single integer to this command, where the integer corresponds to the body index for which Fun3D requires an evaluation of the parameterization. The user-provided executable (or script) must be capable of parsing this integer command-line option in order to process the requested body.

After the external package has completed the evaluation of the parameterization and its sensitivities, the data must be supplied to Fun3D via a Tecplot™ file named `model.tec.i.sd1`, where the integer `i` in the filename represents the current body index. The format of this file must be as follows:

```
TITLE = "PARAMETERIZATION DATA"
VARIABLES = "X" "Y" "Z" "ID" "XD1" "YD1" "ZD1"  "XD2" "YD2" "ZD2"  "XD3" "YD3" "ZD3"
ZONE T = group0, I = 4, J = 1, F=FEPOINT
0.0 1.0 0.0 235 1.234 -23.0 892.1 -23.0 82.123 -90.2 -905.2 857.12 348.2
1.0 1.0 0.0 872 4.14 -0.123 -0.324 23.13 2978.2 -0.114 -982.4 -3.22 0.1185
1.0 0.0 0.0 912 -0.34 0.938 8.45 78.23 -35.2 -0.023 8.32 -0.009 -0.92
0.0 0.0 0.0 455 9.01 -8.23 -0.456 2.56 1.21 0.0 -0.091 -1.22 0.0088
1 2 3 4
```

The trivial (and completely contrived) example shown here provides surface mesh point locations and the corresponding sensitivities for a single quad element parameterized by three design variables. The title in the first line may contain anything the user desires. The variables identified in line 2 represent the x-, y-, and z-coordinates for the current surface mesh point, the node index in the global grid for the current surface mesh point, and the sensitivity derivatives of the x-, y-, and z-coordinates of the current surface mesh point with respect to each of the design variables provided by Fun3D in `customDV.i` above. The file should contain a single zone, indicated by the third line of the example file shown. Here, the zone title specified by `T =` may be anything the

user desires. The `I =` value corresponds to the number of surface mesh points for the current body, while the `J =` value specifies the number of surface elements (triangles or quads) contained in the surface mesh for the current body. FUN3D will only read the `I =` value; the surface mesh topology is immaterial in this context.

In this example, the floating point values have been truncated for readability; users are strongly encouraged to provide double-precision values in practice. The connectivity information at the end of the file is not used by FUN3D. It may be omitted if desired; however, it is often instructive to load this file into Tecplot™ for visualization. In that context, the connectivity data (including the appropriate `J =` value in the file header) will be required.

For very large surface meshes and/or parameterizations containing a very large number of design variables, I/O of this ASCII format can be inefficient. There is an alternative C-binary/Fortran stream format that may be used in its place; interested users should get in touch with `Fun3D-Support@lists.nasa.gov` for further details on this option.

To support execution of the user-defined parameterization tool, auxiliary files may be provided in the `description.i` directory; the filenames should be provided in the file `user_def_param_files.data` (see section 9.6.1).

9.4 Design Optimization Directory Structure

The optimization driver `opt_driver` requires a very specific directory structure. It can be established by running `opt_driver` in an interactive mode with the `--setup_design` command line option. The number of design points should be 1 for single-point design or greater than 1 for multi-point design.

```
opt_driver --setup_design [number of design points]
```

This interactive command will prompt the user for several directory paths required by the optimization, namely the paths to the FUN3D source code, the configuration directory where FUN3D was configured and built, and the path to the location where the design will be performed. Here, directories should be provided as absolute paths contained in single quotes, with trailing slashes omitted, i.e.,

```
'/absolute/path'
```

At the completion of this setup procedure, a summary of the files required from the user will be echoed to the screen. The directories created in the specified run location are shown in Table 11. The `i` suffix in `description.i` and `model.i` represents the design point index. For single-point design, this will be `1`; for multi-point design, this value will range from `1` to the number of user-specified design points. The setup procedure will populate the various directories with links to the required FUN3D executables and templates for various input files described below.

Table 11: Directory structure required for FUN3D-based design.

Directory	Description
ammo	Location where optimization will be executed
description.i	Location of all baseline input files describing design point i
model.i	Location where analysis & sensitivity analysis of design point i will be performed

9.5 Contents of the ammo Directory

The ammo directory will contain files related to the optimization procedure itself. This includes the design.nml input file described in section 9.5.1 and a link to the opt_driver executable.

9.5.1 &design namelist in design.nml

This namelist contains variables that specify inputs relevant to running design optimization. While many of the default values for the variables in this namelist may be acceptable, at a minimum, the user will need to specify what_to_do and provide the base_directory name in which the case is to be executed.

```
&design
  what_to_do           = 1
  restart_optimization = .false.
  previous_evaluations = 0
  max_design_cycles    = 10
  base_directory       = ''
  n_design_pts         = 1
  design_pt_weight(:)  = 1.0
  opt_algorithm        = 4
  max_function_evals   = 20
  tau_subproblem       = 1.0e-4
  feas_tol_val         = 1.0e-3
  dot_method           = 1
  user_def_executable  = ''
  body_grouping        = .false.
  n_body_transforms    = 0
  body_transforms(:)   = 0
  mpirun_prefix        = 'mpiexec'
  adjoint_nproc        = 0
/
```

what_to_do = 1

This is the operation performed by the optimization driver.

'1' only performs the function evaluation.

`'2'` performs the function evaluation and sensitivity analysis.

`'3'` performs optimization.

`restart_optimization = .false.`

This logical specifies whether to start the optimization from the baseline problem description or to restart the optimization from a previous run already executed in this directory.

`previous_evaluations = 0`

Number of previous evaluations when `restart_optimization=.true.` for which history files have been saved. Several files are saved with each function/sensitivity evaluation (convergence history, surface history, etc.) by appending the evaluation number to the end of the file name. This `previous_evaluations` allows the previous history files to remain to maintain a contiguous history for the optimization. See section 9.6.7 for details on this archiving scheme.

`max_design_cycles = 10`

This scalar integer sets an upper limit on the number of design cycles the optimizer may perform.

`base_directory = ''`

This string should be an absolute path to the design location specified during the setup procedure. Path should be enclosed in single quotes and contain no trailing slashes.

`n_design_pts = 1`

This scalar integer is the number of design points to be considered during the optimization. The value should be at least `1` and less than or equal to the number of design points specified during the setup procedure.

`design_pt_weight(:) = 1.0`

A non-negative real-valued scalar should be specified for each design point. The value represents the weighting to be applied in the linear combination of objective functions from each individual design point as used to construct the final composite objective function (see section 9.10). For single point optimization, a single value of `1.0` should be specified.

`opt_algorithm = 4`

This integer specifies the optimizer to be used. Fun3D must be configured and built with the specified optimization library. See section A.8 for more information on obtaining installing the optimizers.

`'1'` utilizes the DOT/BIGDOT™ optimizer.

'3' utilizes the KSOPT optimizer.

'4' utilizes the PORT optimizer.

'5' utilizes the NPSOL™ optimizer.

'6' utilizes the SNOPT™ optimizer.

`max_function_evals = 20`

This scalar integer is only relevant for PORT-based optimizations and sets an upper limit on the number of flow solutions allowed during the design.

`tau_subproblem = 1.0e-4`

This scalar real value is only relevant for DOT/BIGDOT™- and PORT-based optimizations and specifies the relative function convergence criterion for which the optimization will terminate.

`feas_tol_val = 1.0e-3`

This scalar real value is only relevant for optimizations based on the DOT/BIGDOT™, NPSOL™, and SNOPT™ packages. The value specifies the feasibility tolerance for constraints.

`dot_method = 1`

This scalar integer is only used for DOT/BIGDOT™-based optimization and specifies the optimization method to be used with DOT/BIGDOT™. See the DOT/BIGDOT™ documentation for further information.

`user_def_executable = ''`

This string enclosed in single quotes represents the name of the executable (or script) to be launched if user-defined geometric parameterizations are to be used. The executable should be available in the users `PATH`. See also section 9.3.4.

`body_grouping = .false.`

This logical specifies whether any body grouping should be applied. See also section 9.6.4.

`n_body_transforms = 0`

This scalar integer specifies the number of MASSOUD-parameterized bodies for which spatial transforms should be applied. See also section 9.6.10.

`body_transforms(:) = 0`

These integers specify the MASSOUD-parameterized bodies to which spatial transforms are to be applied. There should be `n_body_transforms`

entries supplied. If `n_body_transforms` is zero, this line of data should not be present. See also section 9.6.10.

`mpirun_prefix = 'mpiexec'`

This string enclosed in single quotes will be used as a prefix when running MPI programs. This is usually `mpirun` or `mpiexec`, depending on the MPI implementation, or perhaps `aprun` on Cray® systems.

`adjoint_nproc = 0`

This scalar integer specifies the number of processors on which to execute the adjoint solver. Most often, this is the same number of processors requested for the job and the value used for the flow solver. However, in the event that a split communicator is being used for the flow solver (e.g., for simultaneous execution of Suggar++, VisIt, dedicated file I/O, etc), the actual flow solution will be performed on some subset of the cores dedicated to the overall job. In this case, the adjoint solver must be forced to execute on the same reduced number of cores, which is specified using this input. If the value of `adjoint_nproc` is set to `0`, then the adjoint solver will be executed on the total number of processors allocated to the overall job.

9.6 Contents of the `description.i` Directory

The `description.i` directory serves as a repository for the baseline files for the CFD model, the geometric parameterization, and several other input files related to the computational model for the `i`th design point. These files must be set up by the user prior to the run and will not be modified by Fun3D during execution. During the initial setup procedure, templates for several input files will be placed in this location to aid in setting up the case. During the actual optimization, the optimization driver will copy files from this directory into the `model.i` directory as needed.

Any files normally required by the flow solver must be present in this directory. This would typically include the grid and boundary condition files and `fun3d.nml`. If the mesh uses overset grids assembled with the Suggar++ utility, the Suggar++ DCI file must be present as well. The optional file `remove_boundaries_from_force_totals` (section B.3) may also be present, if desired.

In addition to the files normally required by the flow solver, a number of other files must also be present to perform the design optimization, some of which are optional. These are described below.

9.6.1 Geometry Parameterization Files

If performing shape optimization, the user must provide the relevant parameterization files for each body in the mesh to be modified. The specific set of files required for each body depends on the parameterization package(s) being used.

MASSOUD Parameterizations For MASSOUD parameterizations, the MASSOUD parameterization files should be named `design.gp.j`, where `j` is the index of the body to be designed. The files specifying the values of the raw MASSOUD variables should be named `design.j` for each of the bodies to be designed. For FUN3D-based design, the custom design variable linking feature of MASSOUD must be used. If the raw MASSOUD variables are intended to be used as-is, simply set the linking matrix as the identity matrix in the MASSOUD `.usd` file. These files specifying the design variable linking for each body should be named `design.usd.j`.

The MASSOUD control file specifies the names of the files outlined above for MASSOUD and must be provided as `massoud.j` for the `j`th body. The files listed in the MASSOUD control file must reflect these names. The first line of the MASSOUD control file(s) must have a positive integer equal to the number of custom design variables. If the intent is simply to use the raw MASSOUD variables as-is, this value is simply the number of raw MASSOUD variables for that body. For the in/out-of-core parameter, use in-core (0). The file name for Tecplot™ output viewing must be named `model.tec.j` for the `j`th body. The design variable grouping file specified should be named `designVariableGroups.j` for the `j`th body. The FAST output file name can be named anything the user wishes; the FUN3D tools do not use this MASSOUD output file. Finally, the user design variable file for the `j`th body should be named `customDV.j`. In summary, a `massoud.j` control file for the `j`th body should look like the following:

```
#MASSOUD INPUT FILE
# runOption 0-analysis, >0-sd users dvs, -1-sd massouds    dvs
52
# core 0-incore solution, 1-out of core solution
0
# input parameterized file
design.gp.1
# design variable input file
design.1
# input sensitivity file - used for runOption > 0
design.usd.1
# output file grid file
newframe.fast.1
```

```
# output Tecplot file for viewing
model.tec.1
# file containing the design variables group
designVariableGroups.1
# user design variable file
customDV.1
```

Bandaid Parameterizations For Bandaid parameterizations, the input files created by the Bandaid setup tool should be named `bandaid.data.j` for the `j`th body. Because Bandaid parameters behave linearly, the sensitivities contained in these files are constant and this input is all that is required during the course of a design.

Sculptor™ Parameterizations For Sculptor™ parameterizations, the user must provide `[project_rootname].mdf`, `[project_rootname].sd1`, `[project_rootname].vol`, and `[project_rootname].stu` files. See the Sculptor™ documentation for more details on each of these files. A file named `[project_rootname].def` must also be provided. An example `[project_rootname].def` file for a simple two-body parameterization is shown below:

```
set_mdf [project_rootname].mdf
default 1 DV1-T1 0.00
default 1 DV1-T2 0.00
default 1 DV1-T3 0.00
default 1 DV1-T4 0.00
default 1 DV1-T5 0.00
default 2 DV2-T1 0.00
default 2 DV2-T2 0.00
default 2 DV2-T3 0.00
export model.tec.1
exit
```

The filename specified for the `export` command must be `model.tec.1`. The remainder of the file is dictated by the specific parameterization developed in the Sculptor™ application.

After the configuration has been parameterized using Sculptor™ and all of the appropriate files have been assembled for FUN3D-based design, a copy of the original `[project_rootname]_massoud_bndry#.dat` file must also be placed in the `description.i` directory, but with the file name changed to `[project_rootname].sd1`. Sculptor™ requires this baseline file during the optimization.

Finally, prior to performing the design, the `[project_rootname].sd1` file must be read into Sculptor™ in GUI mode as "Import Mesh/CFD as Tecplot Point FE." Following this, the Sculptor volumes need to be imported

onto the `[project_rootname].sd1` file, and then the model must be saved again. Once this is done, the command `export model.tec.1` within the `[project_rootname].def` batch script will generate a `model.tec.1.sd1` file as needed for FUN3D-based design optimization.

User-Defined Parameterizations In the event that a user-defined geometric parameterization package is to be used, the user must provide a file `user_def_param_files.data`. Since FUN3D will not be aware of any auxiliary files that may be needed by the user-defined parameterization package, those files should be listed here, with a single file name per line. Each file named here must be provided by the user. At run time, FUN3D will move the named files to the appropriate location prior to execution of the parameterization executable indicated by the user in the `&design` namelist in `design.nml`. See also section 9.3.4 and section 9.5.1.

9.6.2 `rubber.data`

This section describes how to set up each block of the design control file `rubber.data`. The template provided in the `Adjoint` directory of the source code distribution is installed in the `description.i` directory during setup. This file serves as the primary control file during the course of the optimization and stores all of the high-level information relevant to the design. The file is repeatedly read and updated by the various tools during the design procedure. A simple example of this file to be used for discussion purposes is shown below.

```
################################################################################
########################### Design Variable Information ########################
################################################################################
Global design variables (Mach number, AOA, Yaw, Noninertial rates)
  Var Active         Value               Lower Bound            Upper Bound
 Mach    0   0.800000000000000E+00  0.000000000000000E+00  0.900000000000000E+00
  AOA    1   1.000000000000000E+00  0.000000000000000E+00  5.000000000000000E+00
  Yaw    0   0.000000000000000E+00  0.000000000000000E+00  0.000000000000000E+00
xrate    0   0.000000000000000E+00  0.000000000000000E+00  0.000000000000000E+00
yrate    0   0.000000000000000E+00  0.000000000000000E+00  0.000000000000000E+00
zrate    0   0.000000000000000E+00  0.000000000000000E+00  0.000000000000000E+00
Number of bodies
    2
Rigid motion design variables for 'wing'
  Var Active         Value               Lower Bound            Upper Bound
RotRate  0   0.000000000000000E+00  0.000000000000000E+00  0.000000000000000E+00
RotFreq  0   0.000000000000000E+00  0.000000000000000E+00  0.000000000000000E+00
RotAmpl  0   0.000000000000000E+00  0.000000000000000E+00  0.000000000000000E+00
RotOrgx  0   0.000000000000000E+00  0.000000000000000E+00  0.000000000000000E+00
RotOrgy  0   0.000000000000000E+00  0.000000000000000E+00  0.000000000000000E+00
RotOrgz  0   0.000000000000000E+00  0.000000000000000E+00  0.000000000000000E+00
RotVecx  0   0.000000000000000E+00  0.000000000000000E+00  0.000000000000000E+00
RotVecy  0   0.000000000000000E+00  0.000000000000000E+00  0.000000000000000E+00
RotVecz  0   0.000000000000000E+00  0.000000000000000E+00  0.000000000000000E+00
TrnRate  0   0.000000000000000E+00  0.000000000000000E+00  0.000000000000000E+00
TrnFreq  0   0.000000000000000E+00  0.000000000000000E+00  0.000000000000000E+00
```

```
TrnAmpl  0   0.000000000000000E+00  0.000000000000000E+00  0.000000000000000E+00
TrnVecx  0   0.000000000000000E+00  0.000000000000000E+00  0.000000000000000E+00
TrnVecy  0   0.000000000000000E+00  0.000000000000000E+00  0.000000000000000E+00
TrnVecz  0   0.000000000000000E+00  0.000000000000000E+00  0.000000000000000E+00
Parameterization Scheme (Massoud=1 Bandaids=2 Sculptor=4 User-Defined=5)
    1
Number of shape variables for 'wing'
    3
Index Active         Value               Lower Bound            Upper Bound
    1    1   1.000000000000000E+00  0.000000000000000E+00  2.000000000000000E+00
    2    1   1.000000000000000E+00  0.000000000000000E+00  2.000000000000000E+00
    3    1   1.000000000000000E+00  0.000000000000000E+00  2.000000000000000E+00
Rigid motion design variables for 'tail'
  Var Active         Value               Lower Bound            Upper Bound
RotRate  0   0.000000000000000E+00  0.000000000000000E+00  0.000000000000000E+00
RotFreq  0   0.000000000000000E+00  0.000000000000000E+00  0.000000000000000E+00
RotAmpl  0   0.000000000000000E+00  0.000000000000000E+00  0.000000000000000E+00
RotOrgx  0   0.000000000000000E+00  0.000000000000000E+00  0.000000000000000E+00
RotOrgy  0   0.000000000000000E+00  0.000000000000000E+00  0.000000000000000E+00
RotOrgz  0   0.000000000000000E+00  0.000000000000000E+00  0.000000000000000E+00
RotVecx  0   0.000000000000000E+00  0.000000000000000E+00  0.000000000000000E+00
RotVecy  0   0.000000000000000E+00  0.000000000000000E+00  0.000000000000000E+00
RotVecz  0   0.000000000000000E+00  0.000000000000000E+00  0.000000000000000E+00
TrnRate  0   0.000000000000000E+00  0.000000000000000E+00  0.000000000000000E+00
TrnFreq  0   0.000000000000000E+00  0.000000000000000E+00  0.000000000000000E+00
TrnAmpl  0   0.000000000000000E+00  0.000000000000000E+00  0.000000000000000E+00
TrnVecx  0   0.000000000000000E+00  0.000000000000000E+00  0.000000000000000E+00
TrnVecy  0   0.000000000000000E+00  0.000000000000000E+00  0.000000000000000E+00
TrnVecz  0   0.000000000000000E+00  0.000000000000000E+00  0.000000000000000E+00
Parameterization Scheme (Massoud=1 Bandaids=2 Sculptor=4 User-Defined=5)
    2
Number of shape variables for 'tail'
    2
Index Active         Value               Lower Bound            Upper Bound
    1    1   2.000000000000000E+00 -1.000000000000000E+00  5.000000000000000E+00
    2    1   2.000000000000000E+00 -1.000000000000000E+00  5.000000000000000E+00
################################################################################
############################### Function Information ###########################
################################################################################
Number of composite functions for design problem statement
    2
################################################################################
Cost function (1) or constraint (2)
    1
If constraint, lower and upper bounds
    0.0 0.0
Number of components for function   1
    1
Physical timestep interval where function is defined
    1 1
Composite function weight, target, and power
1.0 0.0 1.0
Components of function   1: boundary id (0=all)/name/value/weight/target/power
    0 cl            0.000000000000000    1.000   10.00000 2.000
Current value of function   1
   0.000000000000000
Current derivatives of function wrt global design variables
   0.000000000000000
   0.000000000000000
   0.000000000000000
   0.000000000000000
   0.000000000000000
   0.000000000000000
Current derivatives of function wrt rigid motion design variables of body   1
   0.000000000000000
```

```
   0.000000000000000
   0.000000000000000
   0.000000000000000
   0.000000000000000
   0.000000000000000
   0.000000000000000
   0.000000000000000
   0.000000000000000
   0.000000000000000
   0.000000000000000
   0.000000000000000
   0.000000000000000
   0.000000000000000
   0.000000000000000
Current derivatives of function wrt shape design variables of body   1
   0.000000000000000
   0.000000000000000
   0.000000000000000
Current derivatives of function wrt rigid motion design variables of body   2
   0.000000000000000
   0.000000000000000
   0.000000000000000
   0.000000000000000
   0.000000000000000
   0.000000000000000
   0.000000000000000
   0.000000000000000
   0.000000000000000
   0.000000000000000
   0.000000000000000
   0.000000000000000
   0.000000000000000
   0.000000000000000
   0.000000000000000
Current derivatives of function wrt shape design variables of body   2
   0.000000000000000
   0.000000000000000
################################################################################
Cost function (1) or constraint (2)
    2
If constraint, lower and upper bounds
    -0.03 -0.01
Number of components for function   2
    1
Physical timestep interval where function is defined
    1 1
Composite function weight, target, and power
1.0 0.0 1.0
Components of function   2: boundary id (0=all)/name/value/weight/target/power
    0 cmy           0.000000000000000    1.000    0.00000 1.000
Current value of function   2
   0.000000000000000
Current derivatives of function wrt global design variables
   0.000000000000000
   0.000000000000000
   0.000000000000000
   0.000000000000000
   0.000000000000000
   0.000000000000000
Current derivatives of function wrt rigid motion design variables of body   1
   0.000000000000000
   0.000000000000000
   0.000000000000000
   0.000000000000000
   0.000000000000000
```

```
   0.000000000000000
   0.000000000000000
   0.000000000000000
   0.000000000000000
   0.000000000000000
   0.000000000000000
   0.000000000000000
   0.000000000000000
   0.000000000000000
   0.000000000000000
Current derivatives of function wrt shape design variables of body   1
   0.000000000000000
   0.000000000000000
   0.000000000000000
Current derivatives of function wrt rigid motion design variables of body   2
   0.000000000000000
   0.000000000000000
   0.000000000000000
   0.000000000000000
   0.000000000000000
   0.000000000000000
   0.000000000000000
   0.000000000000000
   0.000000000000000
   0.000000000000000
   0.000000000000000
   0.000000000000000
   0.000000000000000
   0.000000000000000
   0.000000000000000
Current derivatives of function wrt shape design variables of body   2
   0.000000000000000
   0.000000000000000
```

Global Design Variable Data This section of `rubber.data` lays out global design variables for the computation. These include the freestream Mach number, angle of attack, and angle of yaw. For simulations using a noninertial reference frame, the noninertial rotation rates about each of the three Cartesian coordinate axes are also available as design variables.

Quantities associated with each variable are specified on their own row in the file and have several attributes that must be set by the user. The first column is a dummy index and is merely to assist the user in quickly navigating through the file. The second column is a toggle to activate the design variable. If this value is a `1`, the variable will be allowed to change during the design. If the value is assigned a `0`, this variable will be held constant at the value specified. For incompressible flows and mixed-element grids, the Mach number must be declared inactive. Similarly, for flows posed in the inertial reference frame, the noninertial rates must be declared inactive.

The third column in the design variable block is the current value for this design variable. The values of any active variables in this file will take precedence over other input decks during design. For example, the flow solver will run an angle of attack of `1` degree in this case, regardless of what may be specified in `fun3d.nml`. Columns four and five specify the upper and lower bounds for the current design variable.

Body-Specific Design Variable Data The next input following the Mach number and angle of attack entries specifies the number of bodies for which the user has provided shape parameterizations. Note that not every body in the grid must be included here. If the wing of an aircraft is the sole focus of the optimization, there is no need to account for other boundaries such as the tail or fuselage here.

Following the number of bodies, there should be two blocks of design variables for each desired body, namely a list of rigid motion variables controlling the dynamics of the body, and a set of shape parameters controlling the shape of the body. The columns of inputs are identical to those described above for Mach number and angle of attack.

The bodies present in the computation may be listed in any order; however, the order of their appearance in this control file must match the integer suffix on their parameterization files that are provided in the `description.i` directory, as well as files such as `body_grouping.data`, `transforms.j`, etc.

The first section for the current body specifies design variables governing rigid body motion and is only applicable for time-dependent problems. For optimization of steady flows and/or static geometries, the rigid motion data is irrelevant but must be present in this file. These variables should be set as inactive in these cases.

The next block of inputs relates to the shape parameterization for the current body. First, the parameterization scheme is identified by a scalar integer. The following values are available: (1) MASSOUD, (2) Bandaids, (4) Sculptor™, and (5) User-Defined. The next input specifies the number of parameterized shape variables on the current body and the subsequent lines lay out the design variable information for that body. A row of data must be provided for every variable in the parameterization, whether it is active or not. (Note however, that internally, the optimizer is only made aware of the variables marked as active.) If a parameterization contains 25 variables, then 25 rows must appear in this corresponding block of `rubber.data`, even if only a subset is active. If the design variable linking feature in MASSOUD or Bandaids has been used to create additional derived variables, they must also appear here. Note that the "Active" attribute for shape variables may take values of not only 0 or 1, but also -1 in certain multi-point design scenarios (see section 9.10).

Care should be taken in choosing upper and lower bounds for shape variables. Optimizers tend to fully explore the design space, which may result in infeasible shapes (or extreme shapes the mesh movement/solvers cannot handle robustly). Set these limits conservatively; one can always restart a design with less restrictive bounds.

As noted previously, when using Sculptor™ parameterizations for multiple bodies, all such design variables must appear as a single concatenated body in `rubber.data`.

Cost Function/Constraint Specification The first line following the design variable block specifies the total number of composite functions to be used as objectives or constraints for the current design point. Multiple composite objective functions may be specified in certain cases; see section 9.9. Otherwise, a single composite objective function must be specified. The example file shown here contains a single composite objective function based on the lift coefficient and a single explicit constraint based on the pitching moment. Note that explicit constraints may only be specified if the optimization package chosen in the `&design` namelist in `design.nml` supports them.

Following the scalar value specifying the total number of composite objectives and constraints, each composite function and/or constraint will have a block of data associated with it. Objective functions and constraints may be specified in any order.

The first two inputs in the composite function block specify a scalar integer indicating how the current function is to be viewed by the optimizer. The two subsequent inputs represent lower and upper bounds on the function if it is to be used as a constraint. If the function is an objective function, the first input value should be `1`, and the lower and upper bounds must be present but their values are irrelevant. However, if the current function is to be used as a constraint, special attention must be paid to these inputs depending on the optimization package being used.

Constraints Using NPSOL™ and SNOPT™ If the current function is to be used as an inequality constraint, the first input should be `2`, and the lower and upper bounds should be set to their appropriate values. If the current function is to be used as an equality constraint, the first input should be `2`; however, the lower and upper bounds should both be set equal to the desired constraint value.

Constraints Using KSOPT and DOT/BIGDOT™ These optimization packages assume constraint functions of the form $f \leq 0$, such that the bound of the feasibility region is implicit in the function definition and the lower and upper bound inputs must be present but are not used. If the current function is intended as an inequality constraint, the first input should be `2`. If the current function is intended as an equality constraint, the first input value should be `3`. In this case, Fun3D's design driver will provide the current function to the optimizer as an inequality constraint, but will also bookkeep an equal and opposite function as an additional inequality constraint. In this manner, an equality constraint is achieved by only allowing the intersection of the two inequality constraints as feasible.

Following the classification of the current function, the next line states how many component functions comprise the current composite function. This can

be any positive integer greater than or equal to `1`. Following the number of component functions, the user must specify the physical time step interval over which the function is to be applied. This input is only relevant to optimization of unsteady flows. For steady flows, the values of these two inputs are ignored but must be present.

The weight, target, and power to be applied to the current composite function are specified next. These values are only relevant when combining multiple composite objective functions into a single global objective function (see section 9.9). For all other cases, these values should be specified as `1.0`, `0.0`, and `1.0`, respectively.

At this point, each component function that contributes to the current composite function has a line specifying several pieces of data. The first column is the boundary patch over which to apply the current component. This index corresponds directly to the boundary patches in the CFD grid, and must reflect any patch lumping that is indicated in the `&raw_grid` namelist in `fun3d.nml` (see section B.4.2). If a component function is to be used over the entire grid (total drag, for example), simply put a `0` in this column. Alternatively, if a single boundary patch is to be targeted, one might apply the component function to only that patch. Several patches may be targeted by including a component function for each. The next column is the keyword for the aerodynamic quantity to be used for the current function component. For a list of available keywords, see section 9.1. The next column contains the current value of the current function component. This is an output value during the optimization and need not be set by the user. The final three columns in the row correspond to the weight, target value, and power to be applied to the current component function in constructing the overall composite function.

Current Function Value and Sensitivities Following the specification of the component functions, the next line of `rubber.data` contains the current value of the composite function. This is an output and need not be set by the user.

The remaining lines in the current function block contain the sensitivity derivatives with respect to all of the design variables listed in the top half of the file. This section is divided into derivatives with respect to the global design variables, as well as the rigid motion and shape design variables for each of the bodies laid out in the top portion of the file. These derivatives are outputs set by FUN3D and not by the user. However, a line for each design variable (both global variables as well as body-specific variables) must be provided in each composite function block present. The values do not matter, but the solvers need positions available in the file to store the current values.

9.6.3 `ae_target.dat` (optional)

If the function keyword `ae` is specified anywhere in `rubber.data`, the file `ae_target.dat` must be present prior to performing the optimization. This file provides the target equivalent area distribution(s) for each of the azimuthal locations specified in the `&equivalent_area` namelist in `fun3d.nml` (in the same order). See section 9.2.9 and section B.4.41.

9.6.4 `body_grouping.data` (optional)

This file is used to specify body grouping information. For example, if the objective function is the Figure of Merit FM for a three-bladed rotor, then the three blades (each typically specified as a separate parameterized body in `rubber.data`) should be associated into one group, so that sensitivity derivatives will reflect a composite $\partial(FM)/\partial D$ for all three blades. This capability requires that the bodies to be associated all have identical parameterizations (same number of design variables on each body, etc). The format of the `body_grouping.data` file is as follows:

```
Number of groups to create
1
Number of bodies in group, list of bodies
3
1 2 3
```

The first scalar integer specifies the number of groups to create (i.e., one rotor). The next set of inputs specifies the number of bodies in each group, followed by the bodies that comprise that group (i.e., each of the three rotor blade bodies).

9.6.5 `command_line.options` (optional)

The `command_line.options` file specifies any command line options to be used with the flow solver, the adjoint solver, or the MPI job launcher (`mpirun`, `mpiexec`, `aprun`, etc). An example of this file is shown below.

```
3
1 flow
'--rmstol 1.e-7'
1 adjoint
'--rmstol 1.e-3'
2 mpirun
'-nolocal'
'-machinefile ../machinefile'
```

The first line of the file specifies the number of programs for which command line options are being provided. The subsequent line must contain an integer followed by a keyword. The integer specifies how many command line options are being provided for the code identified by the keyword. The valid keywords are `flow`, `adjoint`, and `mpirun`. This line is followed by a line for each of the command line options provided for the code identified by the keyword. Each command line option should appear in single quotation marks on its own line. The specified programs and their associated command line options may appear in any order.

If a `-np x` option is provided as a command line option to the MPI job launcher to specify the number of processes to run (given by the value `x`), this value will override the value specified for execution of the adjoint solver in the `&design` namelist in `design.nml` (see section 9.5.1).

9.6.6 `cpstar.data.j` (optional)

FUN3D has an inverse design capability where the objective function may be composed of target pressure distributions. The file containing the `j`th target distribution must be named `cpstar.data.j`. However, setup is tedious, primarily due to the difficulty in specifying pressure distributions on a three-dimensional configuration. If this capability is of interest, please contact `Fun3D-Support@lists.nasa.gov` for more detailed guidance.

9.6.7 `files_to_save.data` (optional)

If desired, users may indicate specific files produced by the flow and adjoint solvers to be archived during an optimization. For example, custom visualization files may be produced at each design iteration (see section 5.3.1) to enable animations of the design history after the optimization is complete.

To specify certain files to be archived during the course of a design execution, the user may provide the optional file `files_to_save.data` in the `description.i` directory. Each line of the file consists of one of two keywords, either "Flow" or "Adjoint", followed by the specific name of a file to be archived. For example, the following inputs could be used to archive Tecplot™ files containing solution data on boundaries for both the flow and adjoint solvers, while also saving two additional Tecplot™ files containing user-specified sampling data for the flow solution:

```
Flow [project_rootname]_tec_boundary.dat
Flow [project_rootname]_tec_sampling_geom1.dat
Flow [project_rootname]_tec_sampling_geom2.dat
Adjoint [project_rootname]_tec_boundary.dat
```

At the end of each function evaluation (i.e., flow solution) for the `i`th design point, the files `[project_rootname]_tec_boundary.dat`, `[project_rootname]`

_tec_sampling_geom1.dat, and [project_rootname]_tec_sampling_geom2.dat will be stored in the model.i/Flow/SaveFiles directory, with an integer corresponding to the current design iteration appended to each of the filenames. Similarly, the file [project_rootname]_tec_boundary.dat will be stored in the model.i/Adjoint/SaveFiles directory at the completion of each sensitivity analysis (i.e., adjoint solution).

9.6.8 machinefile (optional)

If the optimization will be executed in an environment which requires an explicit list of machines on which the MPI jobs will be executed, this file must be present. It should take the format required of the particular MPI implementation being used. If the optimization will be executed in an automated queuing environment, the job scheduler normally assigns the machines to be used at runtime and this file is therefore not required.

9.6.9 pressure_target.dat (optional)

If the function keyword boom_targ is specified anywhere in rubber.data, the file pressure_target.dat must be present prior to performing the optimization. This file provides the nearfield target p/p_∞ distribution(s) for each of the off-body locations specified in the &sonic_boom namelist in fun3d.nml (in the same order). See section 9.2.7 and section B.4.39.

9.6.10 transforms.i (optional)

Since MASSOUD uses a coordinate system specific to an assumed aircraft orientation, it is sometimes necessary to reorient a body from its physical position to a MASSOUD-aligned coordinate system and vice-versa. Examples might include a vertical tail or the various blades of a rotor system. The file describing the transform for the ith body should be included as transforms.i. The format of a typical transforms.i file is as follows:

```
ROTATE 0.0 0.0 1.0 -120.0
```

This would rotate the MASSOUD parameterization for the ith body by -120 degrees about a unit vector in the $+z$ direction. The commands TRANSLATE and SCALE are also available.

9.7 Contents of the model.i Directory

Just as for the description.i directories, the i in the model.i naming convention represents the design point index. This value is 1 for single point design or the design point index for multi-point design. The model.i directory contains the subdirectories Flow, Adjoint, and Rubberize. During the course

of the design procedure, FUN3D will evaluate the relevant parameterizations and perform flow and adjoint solutions within these locations. These subdirectories are populated during the initial setup procedure with links to the required executables from the user's FUN3D installation. Files in the `model.i` subdirectories should not be modified by the user, although one may wish to observe various solver output files during the course of the optimization. All user-provided inputs are confined to files located in the `description.i` and `ammo` directories.

9.8 Running the Optimization

Once all of the required inputs and files have been provided, the user should first request a single function evaluation from the optimization driver. This is strongly recommended in order to identify any potential issues in the various inputs. To perform this check, set the value of `what_to_do` in the `&design` namelist in `design.nml` to `1`, and execute the optimization driver from the `ammo` subdirectory:

```
opt_driver > screen.output &
```

Here, the output from the optimization driver has been redirected to a file called `screen.output`. This file is very useful if a problem needs to be diagnosed with the execution. It is also good practice to include this file with help requests to `Fun3D-Support@lists.nasa.gov`.

At the completion of the function evaluation, the user should check for the desired/expected result. This is also a good opportunity to establish reasonable values for the number of time steps to run, the residual tolerance at which the solver should quit, and so forth. Such run control parameters may be set in `fun3d.nml` or via the `command_line.options` file.

Once the function evaluation procedure has been verified, the user should perform the same test for a sensitivity analysis by setting `what_to_do` in the `&design` namelist in `design.nml` to `2` and re-executing the optimization driver. Similar checks on convergence parameters, etc for the adjoint solver should be noted and applied to the relevant input files.

With successful function and gradient evaluations in hand, an actual optimization may be initiated. The value of `what_to_do` in the `&design` namelist in `design.nml` should be set to `3`, and the optimization driver can be executed as before. The user should closely monitor the screen output as the process proceeds, especially during the first several design cycles when input parameters may first cause problems. The largest changes in design variables often occur early on as well, which can cause issues with mesh movement operations, solver convergence, and other aspects. It is also very useful to occasionally filter the screen output for the current function value(s) reported at the completion of each flow solution in order to monitor overall progress:

```
grep "Current value of function" screen.output
```

When an optimization completes, the optimizer will report the reason for the termination to the screen, which may be a local minimum, or some problem encountered during the simulation. A summary of the optimization is provided by each optimization package in the file(s) noted in Table 12. The final set of design variables and function/constraint values determined by the optimizer will be available in `model.i/rubber.data`. To track the history of the optimization, a backup of all intermediate copies of `rubber.data` are stored in the directory `model.i/Rubberize/surface_history`. Intermediate copies of the surface grids developed during the design process are also stored in this location as `model.tec.j.sd1.iter`, where `j` is the body index, and `iter` is the design iteration. These files may be used to produce animations of the surface history if desired. Using the broad range of visualization output options for the solvers, the user has great freedom to produce customized animations of the design history (see section 9.6.7).

Table 12: Files containing design summary from various optimization packages.

Optimization Package	Summary File(s)
DOT/BIGDOT™	dot.output
KSOPT	ksopt.output
PORT	port.output
NPSOL™	npsol.printfile, npsol.summaryfile
SNOPT™	snopt.printfile, snopt.summaryfile

9.8.1 Filesystem Latency Problems

Design optimization using some cached file systems may experience problems due to the rapid execution of the various tools during the design process. In some cases, a file system lag may cause some processes to receive older/stale versions of files during execution. Specifying the `--sleep_delay [seconds]` command line option to the `opt_driver` executable will pause the optimization process with a sleep duration of `seconds` between subsequent code executions to allow the file system to perform correctly. On older systems, delays as large as 60 seconds are sometimes necessary; more recent systems seem to perform considerably better and values of 5-10 seconds are often sufficient.

9.9 Multi-objective Design

KSOPT, PORT, and SNOPT™ are the only packages currently supported for use with multi-objective design. Details on the usage for each package are provided below.

9.9.1 KSOPT

KSOPT is the only supported optimization package with explicit support for multiple objective functions. When using KSOPT, the user may designate any number of composite functions as objective functions in `rubber.data`.

9.9.2 PORT, SNOPT™

The Fun3D design driver offers a simple approach to scalarizing multiple user-specified objective functions for use with the PORT or SNOPT™ packages. If multiple composite functions are specified in `rubber.data`, the Fun3D design driver will combine them using the weight, target, and power values specified at the *composite* function level (i.e., the input values that appear just before the *component* function data is specified in `rubber.data`, see section 9.6.2). If N composite functions f are labeled as objective functions in `rubber.data`, the scalarized objective function F to be provided to the optimization procedure will take the form

$$F = \alpha_1(f_1 - f_1^*)^{p_1} + \alpha_2(f_2 - f_2^*)^{p_2} + ... + \alpha_N(f_N - f_N^*)^{p_N} \tag{13}$$

where α_i, f_i^*, and p_i are the weight, target, and power values associated with each *composite* function in `rubber.data`.

9.10 Multi-point Design

The Fun3D design infrastructure offers several approaches to multi-point optimization. This refers to design problems where the user may wish to simultaneously optimize a configuration for operations at two different conditions — perhaps the beginning and end of a cruise segment for example, where the aircraft weight may be substantially different. The user may also wish to design for cruise and takeoff or landing (or all three). The various design points may be characterized by different flow conditions (i.e., speed, angle of attack, etc), or more generally, by the geometries (and therefore grids) at each point. For example, one design point may consist of a cruise geometry operating at Mach 0.8, while another design point may be a landing configuration operating at Mach 0.2 with a high-lift system deployed. For examples of Fun3D-based multi-point design in practice, see the studies in [13] and [22]. In these references, a tilt-rotor geometry has been optimized for a set of several blade collective settings as well as hover and forward flight conditions.

To perform a multi-point optimization, the user must request the desired number of design points when setting up the directory structure where the design will be performed (see section 9.4). The user must populate each of the `description.i` directories for each design point `i` just as in the single-point design context. The order of the design points does not matter. The

value of `n_design_pts` in the `&design` namelist in `design.nml` should be set appropriately. Ultimately, FUN3D provides several ways to formulate the multi-point design problem. These approaches are outlined below.

In general, the optimizer will be seeking a unique set of design variables to simultaneously achieve goals at all of the design points. For this reason, a consistent set of design variables across all design points must be used. This applies to the global variables Mach number and angle of attack as well as any body-specific variables such as shape parameters. For example, if a set of 15 thickness variables is provided for a wing shape in cruise, other design points (again, perhaps a landing configuration as an example) must utilize the same set of 15 thickness variables. Moreover, the same subset of design variables must be active at each design point.

Multi-valued Design Variables In some situations, the user may desire different optimal values of a design variable at different design points. For example, consider power minimization for a rotor in hover at two different weight conditions, where each of the two design points may have different minimum thrust coefficients posed as constraints. In addition to other design variables that may be present, the user may have a shape parameter controlling the blade collective setting (blade pitch). However, rather than constraining the optimal blade collective to a single unique value, the user may desire separate, optimal values for each design point. As another example, consider a configuration with an ability to actively morph its outer mold line. In this case, the user may wish to determine optimal values of the shape parameters that are unique to different design points.

To accommodate such multi-valued design variables, the user may set the "Active" attribute for individual shape design variables to -1 in `rubber.data` (see section 9.6.2). If this is done, it must be applied consistently for that same variable across all design points. For variables with this attribute, the FUN3D design driver will internally bookkeep separate values of the variable for each design point. This feature is currently only available for use with the SNOPT™ package.

9.10.1 Linear Combination of Objective Functions

The most straightforward approach to multi-point design is to linearly combine individual objective functions f_i from each of the N design points `i` into a single global objective function f_{mp}:

$$f_{mp} = \alpha_1 f_1 + \alpha_2 f_2 + \alpha_3 f_3 + ... + \alpha_N f_N \tag{14}$$

To perform the optimization in this fashion, a single composite objective function should be posed in each `description.i/rubber.data` file. Each of the α_i

weighting coefficients must be specified in the `design_pt_weight(:)` array in the `&design` namelist in `design.nml`, in the corresponding order.

This form of multi-point design is supported by PORT, DOT/BIGDOT™, and SNOPT™. Note that PORT and SNOPT™ will also combine multiple objective functions within each design point as described in section 9.9 if desired. Explicit constraints can be posed at each design point when using DOT/BIGDOT™ or SNOPT™; such constraints are each treated individually.

9.10.2 Combination of Objective Functions using the Kreisselmeier-Steinhauser Function

Another alternative for performing multi-point design is the approach inherent in the KSOPT package. In this approach, all objective functions and constraints are combined using the Kreisselmeier-Steinhauser (KS) function. The user is referred to [23] for the details of this formulation. Here, the Fun3D design driver gathers any number of objective and constraint functions across all design points and provides them to KSOPT, which internally constructs its KS function for the actual optimization problem.

9.10.3 Single-Point Objective Function with Off-Design Constraint Functions

In this approach to multi-point design, a single objective function is provided to the optimizer, while all other functions are treated as explicit constraints. Here, the user should designate a single composite function across all of the `description.i/rubber.data` input files as an objective function. Any other composite functions at each design point should be designated as constraint functions. KSOPT, SNOPT™, and NPSOL™ support this form of multi-point optimization; SNOPT™ can also construct the final objective function by linearly combining multiple objective functions within the desired design point as described in section 9.9.

9.11 Optimization of Two-Dimensional Geometries

While the Fun3D flow solver supports a 2D mode of operation, this capability is not currently available from within the design infrastructure. Instead, the optimization must be performed as a pseudo-3D case. The user should provide a nominally two-dimensional grid, with a single layer of elements in the spanwise (`y`) direction. The mesh should consist of either prisms or hexahedra (or both), but should contain no pyramids or tetrahedra. Follow the same procedure used for 3D cases to extract the surface grid for parameterization. The surface should be parameterized just as for a 3D simulation; however, the parameterization should allow no spanwise asymmetries in the geometry to

develop. When using MASSOUD or Bandaids, this is readily accomplished by linking the raw parameters with an equal weighting across the span into a single set of design variables that operate in a chordwise fashion. Note that the sidewalls should use `symmetry_y` boundary conditions so that only in-plane mesh deformation occurs during the optimization. The design may now be executed as usual, with the 2D nature of the problem enforced implicitly through the parameterization.

9.12 Using a Different Optimization Package

In a CFD-based design context, the term "function" implies an evaluation of the geometric parameterization, mesh movement (both surface and volume), a flow solution, and an evaluation of the output function/constraint for a given set of design variables. The file manipulations and solver operations necessary to achieve this are not trivial. For users interested in using the tools as "black boxes" providing function data for an optimization package, a wrapper has been provided in the `LibF90` directory of the distribution named `analysis.f90`. This module contains a subroutine called `perform_analysis()` which performs the extensive set of tasks involved with producing the final desired function output.

To obtain sensitivities, the FUN3D package relies on a discrete adjoint formulation. As with function evaluations, the low-level operations required to perform an adjoint-based sensitivity analysis are numerous. A wrapper routine called `perform_sensitivity_analysis()` in the `LibF90/sensitivity.f90` module will perform an adjoint solution for the flow field, an adjoint solution for the mesh movement scheme, an evaluation of the linearized geometric parameterization, and finally produce the desired sensitivity derivatives.

The FUN3D design driver uses the wrappers `perform_analysis()` and `perform_sensitivity_analysis()` to greatly simplify function and gradient evaluations when connecting to off-the-shelf optimization packages. If the user wishes to implement a new optimization strategy, it is highly recommended that these wrappers be used in a similar fashion. A review of the existing modules in the `Design` directory of the FUN3D source code distribution, which implement the currently available optimization interfaces, is also strongly suggested. Users may contact `Fun3D-Support@lists.nasa.gov` for further guidance in leveraging FUN3D's capabilities from within their own existing design framework.

9.13 Implementing New Cost Functions/Constraints

Implementation of new cost functions or constraints is not a trivial undertaking and requires extensive modification of FUN3D source code. Experience in Fortran 2003, unstructured-grid discretizations, development in a domain-

decomposed/distributed-memory environment, and general CFD methods are essential. Routines to evaluate the proposed function and linearizations of the function with respect to both the flow field variables and grid are ultimately required. The complex-variable form of FUN3D (see section 9.14) is invaluable in verifying the accuracy of these linearizations. It is highly recommended that the user contact `Fun3D-Support@lists.nasa.gov` for guidance prior to attempting the implementation of a new cost function or constraint.

9.14 Forward Mode Differentiation Using Complex Variables

The reverse, or adjoint, mode of differentiation is primarily used for design with FUN3D. A forward mode of differentiation is also provided based on the use of complex variables [24–26]. This capability is useful for design problems containing few design variables and many cost functions or constraints. To generate and build a complex-variable FUN3D executable, see section A.6.

The complex-valued flow solver reads the usual real-valued grid files and is set up to compute derivatives of every output variable with respect to Mach number, angle of attack, shape parameters, non-inertial rotation rates, or the x, y, or z coordinate of a single grid point (others are trivial to add). This choice is controlled by the file `perturb.input`. A template for this file is provided in the `[install-prefix]/share/fun3d/Flow` directory[2] and is shown here:

```
    PERTURB   EPSILON GRIDPOINT
          2    1.e-50       666

 0 = No perturbation
 1 = Mach number
 2 = Alpha
 3 = Shape
 4 = x-rotation rate
 5 = y-rotation rate
 6 = z-rotation rate
 7 = Grid point x
 8 = Grid point y
 9 = Grid point z
 10 = Yaw
 11 = error transport (truncation error)
 12 = RCS jet plenum pressure, p0
 100+ = add an imaginary source term to equation
         PERTURB-100 of node GRIDPOINT
```

[2]See section A.3 for `[install-prefix]`.

```
(to verify the adjoint lambda value)
```

The value of `PERTURB` specifies the variable for which sensitivities will be taken with respect to. The valid integer values are as shown above. The input `EPSILON` specifies the magnitude of the imaginary perturbation to be applied. The recommended value is `1.e-50`. If the value of `PERTURB` is greater than six, the value of `GRIDPOINT` specifies the grid point index to perturb. The remaining lines in `perturb.input` are not read; they are simply reminders of the valid inputs just described. The complex-valued flow solver may then be executed in a manner similar to the real-valued flow solver:

```
mpirun ./complex_nodet_mpi
```

To compute derivatives with respect to a shape parameterization variable, the sensitivities of the parameterization must first be evaluated in the directory `model.i/Rubberize` using the relevant parameterization software. The value of `PERTURB` should be set to `3` in `perturb.input`.The complex-valued flow solver can then be executed in the following fashion:

```
mpirun ./complex_nodet_mpi --dv_index [body] [dv] --snap_grid
```

Here, the values of `body` and `dv` specify the body and design variable index in `rubber.data` to which to apply the imaginary perturbation. The `--snap_grid` argument forces the flow solver to propagate the surface sensitivities into the volume mesh using FUN3D's elasticity-based deformation mechanics.

At the completion of the complex-valued flow solve, outputs will contain both real and imaginary parts. The imaginary part represents the sensitivity of that output with respect to the perturbation variable that was specified in `perturb.input`.

References

1. Advisory Group for Aerospace Research and Development: Experimental Data Base for Computer Program Assessment: Report of the Fluid Dynamics Panel Working Group 04. NATO Research and Technology Organisation AGARD AR-138, Jan. 1979.

2. Anderson, W. K.; and Bonhaus, D. L.: An Implicit Upwind Algorithm for Computing Turbulent Flow on Unstructured Grids. *Comp. & Fluids*, vol. 23, no. 1, Jan. 1994, pp. 1–21.

3. Alexandrov, N.; Atkins, H. L.; Bibb, K. L.; Biedron, R. T.; Gnoffo, P. A.; Hammond, D. P.; Jones, W. T.; Kleb, W. L.; Lee-Rausch, E. M.; ; Nielsen, E. J.; Park, M. A.; Raman, V. V.; Roberts, T. W.; Thomas, J. L.; Vatsa, V. N.; Viken, S. A.; White, J. A.; and Wood, W. A.: Team Software Development for Aerothermodynamic and Aerodynamic Analysis and Design. NASA TM-2003-212421, 2003.

4. Hecht, F.: The Mesh Adapting Software: BAMG. INRIA Report, 1998. http://www-rocq1.inria.fr/gamma/cdrom/www/bamg/eng.htm.

5. Carlson, J.-R.: Inflow/Outflow Boundary Conditions with Application to FUN3D. NASA TM-2011-217181, NASA Langley Research Center, Oct. 2011.

6. Peiró, J.; Peraire, J.; and Morgan, K.: FELISA System Version 1.1 Reference Manual Part 2–User Manual. University of Wales/Swansea Technical Report CR/822/94, Aug. 1994.

7. Nielsen, E.; Lu, J.; Park, M.; and Darmofal, D.: An Implicit, Exact Dual Adjoint Solution Method for Turbulent Flows on Unstructured Grids. *Computers and Fluids*, vol. 33, no. 9, 2004, pp. 1131–1155.

8. Schneider, P. J.; and Eberly, D. H.: *Geometric Tools for Computer Graphics*. Morgan Kaufmann, 2002.

9. Newman III, J.; Taylor, A.; Barnwell III, R.; Newman, P.; and Hou, G.-W.: Overview of Sensitivity Analysis and Shape Optimization for Complex Aerodynamic Configurations. *Journal of Aircraft*, vol. 36, no. 1, 1999, pp. 87–96.

10. Peter, J.; and Dwight, R.: Numerical Sensitivity Analysis for Aerodynamic Optimization: A Survey of Approaches. *Computers and Fluids*, vol. 39, no. 3, 2010, pp. 373–391.

11. Nielsen, E.; and Diskin, B.: Discrete Adjoint-Based Design for Unsteady Turbulent Flows on Dynamic Overset Unstructured Grids. *AIAA Journal*, vol. 51, no. 6, 2013, pp. 1355–1373.

12. Jones, M.: CFD Analysis and Design Optimization of Flapping Wing Flows. Ph.D. Thesis, North Carolina A&T State University, June 2013.

13. Nielsen, E.; Lee-Rausch, E.; and Jones, W.: Adjoint-Based Design of Rotors in a Noninertial Reference Frame. *AIAA Journal of Aircraft*, vol. 47, no. 2, 2010, pp. 638–646.

14. Bloch, G. S.: An Assessment of Inlet Total-Pressure Distortion Requirements for the Compressor Research Facility. Wright Laboratory Technical Report WL-TR-92-2066, 1992.

15. Rallabhandi, S. K.: Advanced Sonic Boom Prediction Using the Augmented Burgers Equation. *AIAA Journal of Aircraft*, vol. 48, no. 4, July–Aug. 2011, pp. 1245–1253.

16. Rallabhandi, S.: Sonic Boom Adjoint Methodology and its Applications. AIAA Paper 2011–3497, 2011.

17. Rallabhandi, S.; Nielsen, E.; and Diskin, B.: Sonic Boom Mitigation Through Aircraft Design and Adjoint Methodology. AIAA Paper 2012–3220, 2012.

18. Rallabhandi, S.: Application of Adjoint Methodology to Supersonic Aircraft Design Using Reversed Equivalent Areas. AIAA Paper 2013–2663, 2013.

19. Samareh, J. A.: Novel Multidisciplinary Shape Parameterization Approach. *AIAA Journal of Aircraft*, vol. 38, no. 6, Nov.–Dec. 2001, pp. 1015–1024.

20. Samareh, J. A.: Aerodynamic Shape Optimization Based on Free-From Deformation. AIAA Paper 2004–4630, 2004.

21. Nielsen, E.; and Jones, W.: Integrated Design of an Active Flow Control System Using a Time-Dependent Adjoint Method. *Mathematical Modeling of Natural Phenomena*, vol. 6, no. 3, 2011, pp. 141–165.

22. Jones, W.; Nielsen, E.; Lee-Rausch, E.; and Acree Jr., C.: Multi-point Adjoint-Based Design of Tilt-Rotors in a Noninertial Reference Frame. AIAA Paper 2014–290, 2014.

23. Wrenn, G. A.: An Indirect Method for Numerical Optimization using the Kreisselmeir-Steinhauser Function. NASA CR-4220, NASA Langley Research Center, Mar. 1989.

24. Lyness, J. N.: Numerical Algorithms Based on the Theory of Complex Variables. *Proceedings of the ACM 22nd National Conference*, Thomas Book Co., 1967, pp. 124–134.

25. Lyness, J. N.; and Moler, C. B.: Numerical Differentiation of Analytic Functions. *J. Numer. Anal.*, vol. 4, 1967, pp. 202–210.

26. Anderson, W. K.; Newman, J. C.; Whitfield, D. L.; and Nielsen, E. J.: Sensitivity Analysis for the Navier-Stokes Equations on Unstructured Meshes Using Complex Variables. *AIAA J.*, vol. 39, no. 1, Jan. 2001, pp. 56–63. See also AIAA Paper 99-3294.

27. Boman, E. G.; Catalyurek, U. V.; Chevalier, C.; and Devine, K. D.: The Zoltan and Isorropia Parallel Toolkits for Combinatorial Scientific Computing: Partitioning, Ordering, and Coloring. *Scientific Programming*, vol. 20, no. 2, 2012, pp. 129–150.

28. Biedron, R. T.; and Thomas, J. L.: Recent Enhancements to the FUN3D Flow Solver For Moving-Mesh Applications. AIAA Paper 2009–1360, 2009.

29. Anderson, W. K.; Rausch, R. D.; and Bonhaus, D. L.: Implicit/Multigrid Algorithms for Incompressible Turbulent Flows on Unstructured Grids. *J. Comput. Phys.*, vol. 128, no. 2, 1996, pp. 391–408.

30. Sutton, K.; and Gnoffo, P. A.: Multi-Component Diffusion with Application to Computational Aerothermodynamics. AIAA Paper 98-2575, June 1998.

31. Park, M. A.: Anisotropic Output-Based Adaptation with Tetrahedral Cut Cells for Compressible Flows. Ph.D. Thesis, Massachusetts Institute of Technology, Sept. 2008.

32. Venkatakrishnan, V.: Convergence to Steady State Solutions of the Euler Equations on Unstructured Grids with Limiters. *Journal of Computational Physics*, vol. 118, no. 1, 1995, pp. 120–130.

33. Spalart, P. R.; and Allmaras, S. R.: A One-Equation Turbulence Model for Aerodynamic Flows. *La Recherche Aerospatiale*, vol. 1, no. 1, 1994, pp. 5–21.

34. Catris, S.; and Aupoix, B.: Density Corrections for Turbulence Models. *Aerospace Science and Technology*, vol. 4, no. 1, Jan. 2000, pp. 1–11.

35. Spalart, P. R.; Jou, W.-H.; Strelets, M.; and Allmaras, S. R.: Comments on the Feasibility of LES for Wing and on a Hybrid RANS/LES Approach. *Proceedings of the First ASOSR Conference on DNS/LES*, Aug. 1997.

36. Allmaras, S. R.; Johnson, F. T.; and Spalart, P. R.: Modifications and Clarifications for the Implementation of the Spalart-Allmaras Turbulence Model. *Seventh International Conference on Computational Fluid Dynamics (ICCFD7)*, 2012.

37. Menter, F. R.: Two-Equation Eddy-Viscosity Turbulence Models for Engineering Applications. *AIAA Journal*, vol. 32, no. 8, Aug. 1994, pp. 1598–1605.

38. Menter, F. R.: Improved two-equation k-omega turbulence models for aerodynamic flows. NASA TM-103975, Oct. 1992.

39. Wilcox, D. C.: Reassessment of the Scale-Determining Equation for Advanced Turbulence Models. *AIAA Journal*, vol. 26, no. 11, Nov. 1988, pp. 1299–1310.

40. Wilcox, D. C.: Formulation of the k-ω Turbulence Model Revisited. *AIAA Journal*, vol. 46, no. 11, Nov. 2008, pp. 2823–2838.

41. Strelets, M.: Detached Eddy Simulation of Massively Separated Flow. AIAA Paper 2001–879, 2001.

42. Woodruff, S. L.: Coupling Turbulence in Hybrid LES-RANS Techniques. *Seventh International Symposium on Turbulence and Shear Flow Phenomena, Ottawa,Canada*, 2010.

43. Lynch, C. E.; and Smith, M. J.: Hybrid RANS-LES Turbulence Models on Unstructured Grids. AIAA Paper 2008–3854, 2008.

44. Lynch, C. E.: Advanced CFD Methods for Wind Turbine Analysis. Ph.D. Thesis, Georgia Institute of Technology, May 2011.

45. Langtry, R. B.; and Menter, F. R.: Correlation-Based Transition Modeling for Unstructured Parallelized Computational Fluid Dynamics Codes. *AIAA Journal*, vol. 47, no. 12, Dec. 2009, pp. 2894–2906.

46. Abdol-Hamid, K. S.; Carlson, J.-R.; and Rumsey, C. L.: Verification and Validation of the k-kL Turbulence Model in FUN3D and CFL3D Codes. NASA TM-2015-218968, Nov. 2015.

47. Spalart, P. R.: Strategies for Turbulence Modelling and Simulations. *International Journal of Heat and Fluid Flow*, vol. 21, no. 3, June 2000, pp. 252–263.

48. Rumsey, C. L.; and Gatski, T. B.: Recent Turbulence Model Advances Applied to Multielement Airfoil Computations. *AIAA Journal of Aircraft*, vol. 38, no. 5, Sept.–Oct. 2001, pp. 904–910.

49. Dacles-Mariani, J.; Zilliac, G. G.; Chow, J. S.; and Bradshaw, P.: Numerical/Experimental Study of a Wingtip Vortex in the Near Field. *AIAA Journal*, vol. 33, no. 9, Sept. 1995, pp. 1561–1568.

50. Dacles-Mariani, J.; Kwak, D.; and Zilliac, G.: On Numerical Errors and Turbulence Modeling in Tip Vortex Flow Prediction. *International Journal for Numerical Methods in Fluids*, vol. 30, no. 1, 1999, pp. 65–82.

51. Shur, M. L.; Strelets, M. K.; Travin, A. K.; and Spalart, P. R.: Turbulence Modeling in Rotating and Curved Channels: Assessing the Spalart-Shur Correction. *AIAA Journal*, vol. 38, no. 5, May 2000, pp. 784–702.

52. Spalart, P. R.; Deck, S.; Shur, M. L.; Squires, K. D.; Strelets, M. K.; and Travin, A.: A New Version of Detached-eddy Simulation, Resistant to Ambiguous Grid Densities. *Theoretical and Computational Fluid Dynamics*, vol. 20, no. 3, July 2006, pp. 181–195.

53. Vatsa, V. N.; and Lockard, D. P.: Assessment of Hybrid RANS/LES Turbulence Models for Aeroacoustics Applications. AIAA Paper 2010–4001, 2010.

54. Carpenter, M. H.; Viken, S. A.; and Nielsen, E. J.: The Efficiency of High Order Temporal Schemes. AIAA Paper 2003–86, 2003.

55. Vatsa, V. N.; Carpenter, M. H.; and Lockard, D. P.: Re-evaluation of an Optimized Second Order Backward Difference (BDF2OPT) Scheme for Unsteady Flow Applications. AIAA Paper 2010–122, 2010.

56. Nishikawa, H.; and Liu, Y.: Accuracy-Preserving Source Term Quadrature for Third-Order Edge-Based Discretization. *Journal of Computational Physics*, vol. 341, Sept. 2017, pp. 595–622.

57. Liu, Y.; and Nishikawa, H.: Third-Order Inviscid and Second-Order Hyperbolic Navier-Stokes Solvers for Three-Dimensional Unsteady Inviscid and Viscous Flows. AIAA Paper 2017-738, 2017.

58. Saad, Y.; and Schultz, M. H.: GMRES: A Generalized Minimum Residual Method for Solving Nonsymmetric Linear Systems. *SIAM Journal on Scientific and Statistical Computing*, vol. 7, no. 3, 1986, pp. 856–869.

59. Knopp, T.; Alrutz, T.; and Schwamborn, D.: A Grid and Flow Adaptive Wall-Function Method for RANS Turbulence Modelling. *Journal of Computational Physics*, vol. 220, no. 1, Dec. 2006, pp. 19–40.

60. Lee-Rausch, E. M.; Frink, N. T.; Mavriplis, D. J.; Rausch, R. D.; and Milholen, W. E.: Transonic Drag Prediction on a DLR-F6 Transport Configuration Using Unstructured Grid Solvers. AIAA Paper 2004–556, 2004.

61. Alauzet, F.; and Loseille, A.: High-Order Sonic Boom Modeling Based on Adaptive Methods. *Journal of Computational Physics*, vol. 229, no. 3, 2010, pp. 561–593.

62. Barth, T. J.: Recent Developments in High Order K-Exact Reconstruction on Unstructured Meshes. AIAA Paper 93–668, 1993.

63. Park, M. A.; Loseille, A.; Krakos, J. A.; and Michal, T.: Comparing Anisotropic Output-Based Grid Adaptation Methods by Decomposition. AIAA Paper 2015–2292, 2015.

64. Alauzet, F.: Size Gradation Control of Anisotropic Meshes. *Finite Elements in Analysis and Design*, vol. 46, no. 1–2, 2010, pp. 181–202.

65. Venditti, D. A.: Grid Adaptation for Functional Outputs of Compressible Flow Simulations. Ph.D. Thesis, Massachusetts Institute of Technology, 2002.

66. Loseille, A.; Dervieux, A.; and Alauzet, F.: Fully Anisotropic Goal-Oriented Mesh Adaptation for 3D Steady Euler Equations. *Journal of Computational Physics*, vol. 229, no. 8, 2010, pp. 2866–2897.

67. Cheatwood, F. M.; and Gnoffo, P.: *User's Manual for the Langley Aerothermodynamic Upwind Relaxation Algorithm (LAURA)*. NASA TM-4674, 1996.

68. Michal, T.; and Krakos, J.: Anisotropic Mesh Adaptation Through Edge Primitive Operations. AIAA Paper 2012–159, 2012.

69. Shenoy, R.: Overset Adaptive Strategies for Complex Rotating Systems. Ph.D. Thesis, Georgia Institute of Technology, May 2014.

70. Park, M. A.; and Carlson, J.-R.: Turbulent Output-Based Anisotropic Adaptation. AIAA Paper 2010–168, 2010.

71. Ffowcs Williams, J. E.; and Hawkings, D. L.: Sound Generated by Turbulence and Surfaces in Arbitrary Motion. *Philosophical Transactions of the Royal Society*, vol. A264, no. 1151, 1969, pp. 321–342.

72. Brentner, K. S.; Lopes, L. V.; Chen, H. N.; and Horn, J. F.: Near Real-Time Simulation of Rotorcraft Acoustics and Flight Dynamics. 59th Annual Forum, AHS International, Alexandria, VA, 2003.

73. Lopes, L. V.; and Burley, C. L.: Design of the Next Generation Aircraft Noise Prediction Program: ANOPP2. AIAA Paper 2011–2854, 2011.

74. Waithe, K. A.: Source Term Model for Vortex Generator Vanes in a Navier-Stokes Computer Code. AIAA Paper 2004-1236, Jan. 2004.

75. Biedron, R. T.; Jacobson, K. E.; Jones, W. T.; Steven J. Massey, E. J. N.; Kleb, W. L.; and Zhang, X.: Sensitivity Analysis for Multidisciplinary Systems (SAMS). NASA TM-2018-220089, 2018.

76. Edwards, J. W.; Bennett, R. M.; Whitlow, Jr., W.; and Seidel, D. A.: Time-Marching Transonic Flutter Solutions Including Angle-of-Attack Effects. *AIAA J.*, vol. 20, no. 11, 1983, pp. 899–906.

77. O'Brien, D. M.: Analysis Of Computational Modeling Techniques For Complete Rotorcraft Configurations. Ph.D. Thesis, Georgia Institute of Technology, 2006.

78. Biedron, R. T.; and Lee-Rausch, E. M.: Rotor Airloads Prediction Using Unstructured Meshes and Loose CFD/CSD Coupling. AIAA Paper 2008–7341, 2008.

79. Goldstein, S.: On the Vortex Theory of Screw Propellers. *Proceeding of the Royal Society of London A: Mathematical, Physical and Engineering Sciences*, vol. 792, no. 123, Apr. 1929, pp. 440–465.

80. Stern, F.; Kim, H. T.; and Patel, V. C.: A Viscous-Flow Approach to the Computation of Propeller-Hull Interaction. *Journal of Ship Research*, vol. 32, no. 4, Dec. 1988, pp. 246–262.

81. Srinivasan, S.; Tannehill, J. C.; and Weilmuenster, K. J.: Simplified Curve Fits for the Thermodynamic Properties of Equilibrium Air. NASA RP-1181, June 1987.

82. Prabhu, R. K.; and Erickson, W. D.: A Rapid Method for the Computation of Equilibrium Chemical Composition of Air to 15,000 K. NASA RP-2792, Mar. 1988.

83. McBride, B. J.; and Gordon, S.: Computer Program for Calculation of Complex Chemical Equilibrium Compositions and Applications. NASA RP-1311, June 1996.

84. Gnoffo, P. A.; Gupta, R. N.; and Shinn, J. L.: Conservation Equations and Physical Models for Hypersonic Air Flows in Thermal and Chemical Nonequilibrium. NASA TP-2867, Feb. 1989.

85. Gupta, R.; Yos, J.; Thompson, R. A.; and Lee, K.: A Review of Reaction Rates and Thermodynamic and Transport Properties for an 11-Species Air Model for Chemical and Thermal Nonequilibrium Calculations to 30,000 K. NASA RP-1232, Aug. 1990.

86. Millikan, R. C.; and White, D. R.: Systematics of Vibrational Relaxation. *Chem. Phys.*, vol. 39, no. 12, Dec. 1963, pp. 3209–3213.

87. Ali, A. W.: The Harmonic and Anharmanic Models for Vibrational Relaxation and Dissociation of the Nitrogen Molecule. U.S. Navy NRL Memo 5924, Dec. 1986.

88. Wright, M.: Recommended Collision Integrals for Transport Property Computations Part 1: Air Species. *AIAA J.*, vol. 43, no. 12, 2005, pp. 2558–2564.

89. Wright, M.: Recommended Collision Integrals for Transport Property Computations Part 2: Mars and Venus Entries. *AIAA J.*, vol. 45, no. 1, 2005, pp. 281–288.

90. Johnston, C. O.; Hollis, B. R.; and Sutton, K.: Spectrum Modeling for Air Shock-Layer Radiation at Lunar-Return Conditions. *Journal of Spacecraft and Rockets*, vol. 45, no. 6, Nov–Dec 2008, pp. 865–878.

91. Johnston, C. O.; Hollis, B. R.; and Sutton, K.: Non-Boltzmann Modeling for Air Shock-Layer Radiation at Lunar-Return Conditions. *Journal of Spacecraft and Rockets*, vol. 45, no. 6, Nov–Dec 2008, pp. 879–890.

92. Johnston, C. O.; Gnoffo, P. A.; and Sutton, K.: The Influence of Ablation on Radiative Heating for Earth Entry. *Journal of Spacecraft and Rockets*, vol. 46, no. 3, May–June 2009, pp. 481–491.

93. Cunto, W.: TOPbase at the CDS. *Astronomy and Astrophysics*, vol. 275, 1993, pp. L5–L8.

94. Gally, T.: Development of Engineering Methods for Nonequilibrium Radiative Phenomena about Aeroassisted Entry Vehicles. Ph.D. Thesis, Texas A&M, 1992.

95. Johnston, C. O.; Hollis, B. R.; and Sutton, K.: Radiative Heating Methodology for the Huygens Probe. *Journal of Spacecraft and Rockets*, vol. 44, no. 5, Sep–Oct 2007, pp. 993–1002.

96. Linde, T.; and Roe, P. L.: On Multidimensional Positively Conservative High-Resolution Schemes. *Barriers and Challenges in Computational Fluid Dynamics*, V. Venkatakrishnan, M. D. Salas, and S. R. Chakravarthy, eds., Springer Netherlands, vol. 6 of *ICASE/LaRC Interdisciplinary Series in Science and Engineering*, 1998, pp. 299–313.

97. Barth, T. J.: Aspects of Unstructured Grids and Finite-Volume Solvers for the Euler and Navier-Stokes Equations. VKI Lecture Series 1994-05, 1994.

98. Diskin, B.; and Thomas, J. L.: unpublished notes, 2013.

Appendix A

Installation

FUN3D is distributed as gzipped archive of source code. The GNU build system is used to package and install FUN3D. The required installation steps are detailed in this section. Due to the large range of capabilities, configuring the dependent packages is the most involved step and is the focus this section.

As was illustrated in the Quick Start section, four basic steps are required:

1. Extract the source code from the gzipped tarball archive with `tar`
2. Configure the desired dependencies and compiler options with `configure`
3. Compile via `make`
4. Install the compiled binaries and supporting scripts via `make install`

If any difficulties arise with the installation process please, send the entire `config.log` file produced by `configure` and the full stdout and stderr of `make` to `Fun3D-Support@lists.nasa.gov`. The user is *strongly* advised against editing the `configure` script or any `Makefile` it produces. We are unable to assist users who have edited these files.

A.1 Extracting Files

After downloading the source code as a gzipped tarball, the user can unpack it with

```
tar zxf fun3d-13.4-*.tar.gz
```

which will create the directory `fun3d-13.4-*`. (The `*` represents a code that the FUN3D uses internally to version the code.) If you have do not have a GNU-compatible `tar`, you may have to insert a separate decompression step, i.e.,

```
gzip -d fun3d-13.4-*.tar.gz | tar zxf -
```

A.2 Configure Introduction

The FUN3D suite of tools is configured and built via the GNU build system and must be configured first. Change to this directory, e.g., `cd fun3d-13.4-*`, and execute

```
./configure --help
```

to see a list of all available compilation options. When `configure` is invoked, detailed results of all the tests it performs are written to the file `config.log`.

Some features of the configure step that have caused problems for users are:

- An incorrect spelling of a `--enable-*` or `--with-*` option is silently ignored. This will result in the intended option not being included in the compiled executable.
- Option values containing spaces must be quoted to be correctly interpreted by the shell (i.e., `FCFLAGS='-option1 -option2'`).
- If the `configure` command is executed more than once with different options, `make clean` is required before the `make` step, so that changes to the configuration are correctly reflected in the compiled executable.

A.3 Alternative Installation Path

The path to the installation directory is specified by the `--prefix=` option. The default is to install to `/usr/local` with executables placed in `/usr/local/bin`. This default location may not be available if the user does not have write permission to this directory (without root or administrator privileges).

To install to an alternative path (e.g., `$HOME/local`), use the `--prefix=` option to set the installation path

```
./configure --prefix=$HOME/local
```

Finally, to include the FUN3D executables in the command search path, add

```
setenv PATH $HOME/local/bin:$PATH
```

to the `~/.cshrc` file or the equivalent for your shell.

A.4 Fortran Compiler Option Tuning (FTune)

By default, `configure` will use compiler and linker options chosen by the FUN3D team. The process is referred to as "FTune." The users `PATH` is searched in a predefined order until the first FUN3D-compatible compiler is found. When configured with MPI, the build will use `mpif90` located in the `bin` directory of the given MPI installation.[A1] However, the user can explicitly specify the desired Fortran compiler via the `FC` environment variable.

To directly specify the compiler and linker options, use the `FCFLAGS` and `LDFLAGS` environment variables. The default behavior is to append their values to the options defined by FTune. If the `--disable-ftune` option is given to `configure`, FTune will be disabled and the values given by `FCFLAGS` and

[A1] To see what the underlying compiler is, use `mpif90 -show`.

LDFLAGS will be used explicitly. For example, to ensure that the Intel® Fortran compiler ifort is used with only the -O3, -ip, and -lm options,

```
./configure --disable-ftune \
  FC=ifort \
  FCFLAGS='-O3 -ip' \
  LDFLAGS='-lm'
```

The order of variables and options are inconsequential, and single quotation marks (') are used to protect values with spaces from the shell. Some FTune options may be *unconditionally required* for a given compiler, as in the case of linking with the math library -lm above.

A.5 Specialized AVX-512 Support

Fun3D provides specialized linear algebra routines based on the use of low-level intrinsics, which can outperform compiler-generated assembly code. This capability is only compatible with the Intel® compiler suite processors supporting the AVX-512 Advanced Vector Extensions SIMD instructions, e.g., Skylake and later for Xeon, Knights Landing for Xeon Phi. AVX-512 support is only available for the 3D calorically perfect gas path.

To enable AVX-512 optimizations, Fun3D should be configured with the option --enable-avx512 and the following C++ compiler flags should be specified (Fortran compiler flags do not require modification),

```
./configure --enable-avx512 \
  CXXFLAGS='-O3 -xMIC-AVX512 -fno-alias -mcmodel=large -DL1P=1 \
            -DL2P=1 -std=c++0x -qno-opt-prefetch'
```

At runtime, the user must also set use_vector_intrinsics = .true. in the &code_run_control namelist (see section B.4.13).

A.6 Complex Variable Version

The Fun3D suite can be compiled with the real variables in the code replaced with complex variables by a source translation tool. This permits the computation of forward-mode sensitivities, see section 9.14 for details. To enable, add the --enable-complex configure option to the configure script. The complex-valued code can be compiled with make complex; and a make install will place the complex-valued executables in the bin installation directory. Enabling the complex variable version will increase the compile time.

A.7 Internal Libraries

FUN3D has internal dependencies to libraries that are distributed with FUN3D. These libraries are automatically built and linked to FUN3D by default.

A.7.1 KNIFE

The KNIFE cutcell library provides cutcell capabilities. The `--without-knife` option will disable this library.

A.7.2 REFINE

The REFINE library provides access mesh adaptation and untangling capabilities. The `--without-refine` option will disable this library.

A.8 External Libraries

FUN3D relies on external libraries to enable some of its advanced applications. Use Table A1 to determine which set of external libraries are necessary for your applications of interest. Discussions of each external library are found in the following sections.

It is highly recommended that FUN3D is configured to use a parallel execution (MPI and one of the partitioner libraries) if you plan to perform any advanced calculations. SUGGAR++ and DiRTlib are only required if overset (chimera) meshes will be used. The 6-DOF library is only required if six degrees of freedom simulations will be performed (trajectories determined by integrating the equation of motion). SPARSKIT is not *required* for mesh deformation, but is strongly recommended as it provides a better solver for the linear elasticity equations. KSOPT, PORT, SNOPT™, NPSOL™, and DOT/BIGDOT™ are optimization libraries. At least one of these optimization libraries is required for performing design optimization.

A.8.1 MPI

MPI provides FUN3D's capability to communicate between processors. Configure with the option

```
--with-mpi=/path/to/MPI
```

where `/path/to/MPI` is the directory where MPI is installed.

In addition, FUN3D must be executed in an environment that represents the same MPI installation used for configuration/compilation (e.g. same mpiexec, mpirun, etc.). Failure to provide such consistency will result in undefined behavior and undetermined segmentation faults.

Table A1: Configuration options.

Option	Parallel Execution	Overset Motion	Computed Trajectories	Unconstrained Design	Constrained Design	Binary Tecplot™ Output	CGNS	Sonic Boom Propagation	Mesh Deformation
MPI	x								
ParMETIS	x								
Zoltan	x								
SUGGAR		x							
DiRTlib		x							
6-DOF			x						
KSOPT					x				
PORT				x					
SNOPT™					x				
NPSOL™					x				
DOT/BIGDOT™					x				
Tecplot™						x			
CGNS							x		
sBOOM								x	
SPARSKIT									x

In some cases, MPI may already be installed on the target machine. If it is not, OpenMPI or MPICH can be used and the option of static MPI libraries is recommended. Also, if building OpenMPI or MPICH from source, it is important to maintain consistency with compilers (both vendor and version) throughout the build and execution of Fun3D and its dependent libraries. For example, if OpenMPI is built with gfortran version 4.4.7, then the execution environment for Fun3D must reflect the same vendor and version, gfortran 4.4.7. Fun3D execution must also employ the same `mpiexec` from the OpenMPI installation used to build the software.

Some high performance computing environments use a proprietary MPI implementation that does not provide `mpif90`. It that situation, the configure option `--without-mpif90` may be required in combination with the `FC` environment variable to explicitly set the compiler.

Verifying the MPI Implementation Functionality A simple Fortran program is included in the FUN3D distribution to verify that the MPI implementation is functional. This is very helpful for quickly troubleshooting issues with the MPI implementation. It is located in `utils/MPIcheck`. From within that directory you should be able to

```
mpif90 -o mpi_hello_world mpi_hello_world.F90
```

and execute on two processors

```
mpiexec -np 2 ./mpi_hello_world
     0 says, "Hello World!"  5 = 5
     1 says, "Hello World!"  5 = 5
```

To verify the Fortran compiler that MPI is built with, try

```
mpif90 -show
```

if the MPI implementation supports it.

A.8.2 ParMETIS

Website: http://glaros.dtc.umn.edu/gkhome/metis/parmetis/overview

The ParMETIS library performs domain decomposition to enable parallel execution of FUN3D. It is critical that FUN3D and ParMETIS are compiled with *exactly* the same MPI installation and compilers. This includes the C compiler used to compile MPI, ParMETIS, and FUN3D.

When configuring FUN3D, use

```
--with-parmetis=/path/to/ParMETIS
```

where `/path/to/ParMETIS` is the directory of the ParMETIS installation. FUN3D expects the `/path/to/ParMETIS` directory to contain the following files in `lib` and `include` subdirectories,

```
/path/to/ParMETIS/lib/libmetis.a
/path/to/ParMETIS/lib/libparmetis.a
/path/to/ParMETIS/include/metis.h
/path/to/ParMETIS/include/parmetis.h
```

These required libraries includes a version of the sequential execution tool METIS packaged with ParMETIS. This included version of METIS is required and must also be built. The included version is incompatible with the independently distributed METIS version.

See the `Install.txt` instructions in the ParMETIS distribution for build instructions. FUN3D requires both `libmetis.a` and `libparmetis.a` libraries and their accompanying header files. There is an example of commands to build both libraries,

```
cd parmetis-4.*
 make config prefix=/path/to/ParMETIS
 make install
 cd metis
  make config prefix=/path/to/ParMETIS
  make install
```

where `/path/to/ParMETIS` matches the FUN3D configure argument.

A.8.3 Zoltan

Website: http://www.cs.sandia.gov/Zoltan/

The Zoltan library [27] performs domain decomposition to enable parallel execution of FUN3D. Note: FUN3D and Zoltan must be compiled with *exactly* the same MPI installation and compilers. This includes the C/Fortran compilers used to compile MPI, Zoltan, and FUN3D.

When configuring FUN3D, use

```
--with-zoltan=/path/to/Zoltan
```

where `/path/to/Zoltan` is the directory of the Zoltan installation. FUN3D expects the `/path/to/Zoltan` directory to contain the following files in `lib` and `include` subdirectories,

```
/path/to/Zoltan/lib/libzoltan.a
/path/to/Zoltan/include/zoltan.h
/path/to/Zoltan/include/zoltan.mod
```

The header file `zoltan.h` recursively includes a number of header files in the `include` path.

See the User's Guide on the Zoltan website for "Building the Zoltan Library" instructions. The Autotools stand-alone build environment is recommended over the CMake option for use with FUN3D. To use Zoltan with FUN3D, the Zoltan library *must* be built with Fortran support. The same C/Fortran compilers and MPI implementation used for FUN3D should be in your path. Here is an example of configuring and building Zoltan for use with FUN3D,

```
cd Zoltan_v3.*
 mkdir build
 cd build
  ../configure \
    --prefix=/path/to/Zoltan \
    --enable-mpi \
    --with-mpi-compilers \
    --enable-f90interface \
    --with-gnumake
  make everything
  make install
```

While the Zoltan installation procedure supports builds against available ParMETIS installations, FUN3D does not require this. If the user wishes to use ParMETIS for domain decomposition, FUN3D should be built directly with ParMETIS support (see section A.8.2).

A.8.4 SUGGAR++-1.0.10 or Higher

Website: http://celeritassimtech.com

SUGGAR++ is used for overset (chimera) applications and assembles composite meshes, cuts holes, determines interpolation coefficients, etc. If configuring with SUGGAR++, Fun3D must also be configured with DiRTlib v1.40 or higher.

SUGGAR++ may be compiled as a stand-alone executable and/or as a library. For static overset meshes you will need the stand-alone compilation; for moving body simulations you will need to compile both the stand-alone executable and the library. See the documentation that comes with SUGGAR++ for more information on how to compile the software.

When configuring Fun3D, use

```
--with-suggar=/path/to/SUGGAR++
```

where `/path/to/SUGGAR++` is the directory where SUGGAR++ library archive files (`.a` files) reside. In this directory, there must be an archive file called `libsuggar.a`, which is the serial compilation of SUGGAR++, and there must also be an archive file called `libsuggar_mpi.a`, which is the MPI compilation of SUGGAR++.

A.8.5 DiRTlib v1.40 or higher

Website: http://celeritassimtech.com

The DiRTlib library must be linked to Fun3D in order to use the overset connectivity data computed by SUGGAR++-1.0.10 or Higher. See the documentation that comes with DiRTlib for more information on how to compile the software.

When configuring Fun3D, use

```
--with-dirtlib=/path/to/DiRTlib
```

where `/path/to/DiRTlib` is the directory where DiRTlib library archive files (.a files) reside. In this directory, there must be an archive file called `libdirt.a`, which is the serial compilation of DiRTlib, and there must also be an archive file called `libdirt_mpich.a`, which is the MPI compilation of DiRTlib.

A.8.6 6-DOF

Contact: Nathan.C.Prewitt@usace.army.mil

The 6-DOF libraries provide trajectory tracing. When configuring Fun3D, use

```
--with-sixdof=/path/to/sixdof
```

where `/path/to/sixdof` is the directory where your 6-DOF installation resides.

A.8.7 KSOPT

Contact: Gregory.A.Wrenn@nasa.gov

The KSOPT [23] library is used for multi-objective and constrained FUN3D-based design optimization. If you configure FUN3D to link to KSOPT, you must use the Fortran 90 implementation of KSOPT with its object files gathered into a library called `libksopt.a`.

When configuring FUN3D, use

```
--with-KSOPT=/path/to/ksopt
```

where `/path/to/ksopt` is the directory where your KSOPT installation resides.

A.8.8 PORT

Website: http://www.netlib.org/port

The PORT library is used for unconstrained FUN3D-based design optimization. The Netlib site offers a tarball of the PORT library with a `Makefile`. Download the tarball from Netlib, but replace the original `Makefile` with the file included inside the FUN3D distribution as `Design/PORT.Makefile`. If you install both the PORT and NPSOL™ libraries, you may have to comment out low-level BLAS routines in one of the two packages because the linker will report the duplicate versions of these routines.

When configuring FUN3D, use

```
--with-PORT=/path/to/port
```

where `/path/to/port` is the directory where your PORT installation resides.

A.8.9 SNOPT™

Website: http://www.sbsi-sol-optimize.com

The SNOPT™ library is used for FUN3D-based design optimization. By default the SNOPT™ package builds a shared library. Either build SNOPT™ with the `--disable-shared` option, or add the the SNOPT™ install directory to your `LD_LIBRARY_PATH` environment variable to ensure FUN3D can find the shared library at run time.

When configuring FUN3D, use

```
--with-SNOPT=/path/to/snopt
```

where `/path/to/snopt` is the directory where your SNOPT™ installation resides.

A.8.10 NPSOL™

Website: http://www.sbsi-sol-optimize.com

The NPSOL™ library is used for constrained FUN3D-based design optimization. If you install both the PORT and NPSOL™ libraries, you may have to comment out low-level BLAS routines in one of the two packages because the linker will report the duplicate versions of these routines.

When configuring FUN3D, use

```
--with-NPSOL=/path/to/npsol
```

where `/path/to/npsol` is the directory where your NPSOL™ installation resides.

A.8.11 DOT/BIGDOT™

Website: http://www.vrand.com/products.html

The DOT/BIGDOT™ library is used for unconstrained or constrained FUN3D-based design optimization. When configuring FUN3D, use

```
--with-DOT=/path/to/dot
```

where `/path/to/dot` is the directory where your DOT/BIGDOT™ installation resides.

A.8.12 Tecplot™

Website: http://www.tecplot.com

By default, any Tecplot™ output generated from within the flow solver itself is written as a text file. If you have a copy of Tecplot™ library `tecio.a` (or `tecio64.a` for 64-bit versions, `teciompi.a` for mpi versions) that allows for binary output,[A2] you may configure the FUN3D suite to use the library via:

```
--with-tecio=/path/to/tecio
```

With this option, Tecplot™ solution data written out from the flow solver will be in binary form. This results in smaller file sizes and faster importation into Tecplot™. The file extension is .plt for binary Tecplot™ 2013 format and earlier, and .szplt for new versions. If you have compiled against new standard TecIO, you can get .plt via the `--plt_tecplot_output` command line option. (This option does not work with TecIO-MPI.)

If you have compiled against the Tecplot™ `tecio` library, you can still request text output via the `--ascii_tecplot_output` command line option.

[A2] The `tecio` library that was shipped with TECPLOT360-2008 had a bug that will result in error messages when the binary files are written. You must get an updated version of the library.

A.8.13 CGNS

Website: http://www.cgns.org

The CGNS library is used for working with files written in CGNS format. CGNS is a convention for writing machine-independent, self-descriptive data files for CFD and includes implementation software. Fun3D has the capability to translate and write CGNS files. The translation utilities are only compiled when CGNS is configured. Version 2.5 or greater of the CGNS library is required. To include CGNS, use

```
--with-CGNS=/path/to/cgns
```

where `/path/to/cgns` is the directory where the CGNS installation resides.

A.8.14 sBOOM

Contact: Sriram.Rallabhandi@NASA.gov

This package propagates a computed pressure signature to the ground for sonic boom simulations. Atmospheric variations are included, and an adjoint version is available for coupling into design and grid adaptation. sBOOM is distributed as a standalone executable or a static library. Fun3D is not able to interact with the standalone executable; the static library must be linked.

You may configure the Fun3D suite to use the library via:

```
--with-SBOOM=/path/to/sBOOM
```

where `/path/to/sBOOM` is the directory where the sBOOM installation resides.

A.8.15 SPARSKIT

Website: http://www-users.cs.umn.edu/~saad/software/SPARSKIT/index.html

The SPARSKIT library is a basic tool-kit for sparse-matrix computations. In particular, SPARSKIT contains an implementation of Yousef Saads' Generalized Minimum Residual (GMRES) method for solving non-symmetric linear systems. GMRES is the recommended method for solving the linear elasticity equations when mesh deformation is used in Fun3D. If Fun3D is not configured with SPARSKIT, then the native Fun3D multi-color point-solve algorithm is used to solve the linear elasticity equations, resulting in slower convergence, especially for large meshes. Version 2 of the SPARSKIT library is required. To include SPARSKIT, use

```
--with-SPARSKIT=/path/to/sparskit
```

where `/path/to/sparskit` is the directory where the SPARSKIT installation (libskit.a) resides.

Appendix B

FUN3D Input Files

There are a variety of input files necessary for the various codes that make up the FUN3D suite. Table B1 lists frequently used input files with a short description. This chapter will describe the basic formats of each of these files and meaning of the specific inputs they contain.

Table B1: FUN3D input files.

File	Description
`stop.dat`	signals a change to the number of iterations / time steps that were requested at the beginning of the run
`remove_boundaries_from_force_totals`	omits boundary faces from total force integration
`[project_rootname].flow`*	flow field solution
`fun3d.nml`	primary Fortran namelist (required)
`moving_body.input`	body motion Fortran namelist
`rotor.input`	describes the rotor actuator disk model
`tdata`	specifies the generic gas model
`kinetic_data`	specifies the possible chemical reactions in the generic gas model
`species_transp_data`	specifies generic gas model species collision cross sections
`species_transp_data_0`	specifies a higher-order generic gas model species collision cross sections
`hara_namelist_data`	controls the radiation models used by the HARA library

* The `[project_rootname]` is a `&project` namelist variable, see section B.4.1.

FUN3D utilizes Fortran namelists for a large portion of input specification because it is defined in the Fortran 90 standard. With all Fortran namelists, leaving out or misspelling any namelist (defined with an ampersand preceding its name) will result in default values being used for all of the parameters within that namelist. For example, if the namelist name `linear_solver_parameters` were to be misspelled as `linear_solver_parameter` (missing `s`), then all parameters within that namelist would be ignored and retain their default values. Leaving out any parameter within a namelist results in the default value for that parameter being used. Misspelling or misusing any particular parameter will typically cause FUN3D to issue an error and stop. While an effort is made to keep the namelists backwards compatible, namelists and namelist entries may be modified or deleted over time. See the release notes on the FUN3D website for entries that have been modified, deleted, or marked for

deprecation.

B.1 stop.dat

This optional file either halts or extends the execution of the solver. The stop.dat plain text file contains a single integer. After every iteration, the solver will check to see if this file exists. If the file is found in the directory that the solver was invoked, the integer is read and a message is printed to the standard output stream of the form, "stop.dat file found, user requested stop at cycle N." If the integer is greater than zero and less than or equal to the current iteration, the solver will write the current solution, delete the stop.dat file, and halt execution. If the integer is less than zero, the solver will *not* write the restart file, but will delete the stop.dat file and halt execution. If the integer is zero, stop.dat will be ignored.

The integer is with respect to the steps variable in the &code_run_control namelist and not with respect to a cumulative number of steps that may result from a restarted run. The value of the integer may be greater than the number of steps specified in fun3d.nml's &code_run_control namelist, so that stop.dat can be used to extend the execution of the solver. Some environments, especially ones with network-mounted filesystems (e.g., NFS), may exhibit a delay in the stop.dat file being read or being deleted.

B.2 [project_rootname].flow

The optional [project_rootname].flow binary file contains flow solution and checkpoint information. The [project_rootname] is a &project namelist variable, see section B.4.1. This file is read by the solver to restart computations from a previously computed flow solution. The contents vary due to the checkpoint requirements of the simulation. The file contains a minimum of the current solution and convergence history. It can also contain working variables for the turbulence model, solutions from previous iterations for time accurate cases, or previous grid positions and velocities for deforming grids.

B.3 remove_boundaries_from_force_totals

The optional remove_boundaries_from_force_totals file is for specifying boundaries that are *not* to be included in the calculation of force and moment totals. This file is useful, for example, in situations where there may be a mounting sting on a wind tunnel model, but only the forces on the model are actually of interest. The forces on the specified boundaries are still computed and appear in the [project_rootname].forces file. However, they are not included in the totals. The position of the text lines in this file is significant. So, follow this template carefully:

```
Remove selected boundaries from the total forces
Number of boundaries to turn off
2
Boundaries to turn off (boundary lumping changes indexes)
12
15
```

The third line is the number of boundaries to exclude. The fifth and subsequent lines are the patch indexes of the excluded boundaries.

B.4 `fun3d.nml`

The main input namelist file, `fun3d.nml`, is described in detail below, with defaults listed before the descriptions. The namelist file contains a large number of input variables. In general, it is not necessary to specify them all because they have suitable default values. Only those variables that are *different* from the defaults need to be specified. An overview of tasks and their associated namelists are listed below.

The project name and grid information:

&project (B.4.1)

&raw_grid (B.4.2)

&force_moment_integ_properties (B.4.3)

&grid_transform (B.4.4)

&body_transform (B.4.5)

The equation set and reference conditions:

&governing_equations (B.4.6)

&reference_physical_properties (B.4.7)

&noninertial_reference_frame (B.4.8)

The inviscid flux discretization:

&inviscid_flux_method (B.4.9)

Turbulence model:

&turbulent_diffusion_models (B.4.10)

&spalart (B.4.11)

&gammaretsst (B.4.12)

Number of and size of time steps or steady iterations:

&code_run_control (B.4.13)

&nonlinear_solver_parameters (B.4.14)

Linear relaxation controls:

&linear_solver_parameters (B.4.17)

&elasticity_gmres (B.4.18)

Boundary conditions and transition:

&boundary_conditions (B.4.20)

&periodicity (B.4.21)

&two_d_trans (B.4.22)

&three_d_trans (B.4.23)

Flowfield initialization:

&flow_initialization (B.4.24)

Force tracking and visualization:

&component_parameters (B.4.25)

&time_avg_params (B.4.26)

&global (B.4.27)

&volume_output_variables (B.4.28)

&boundary_output_variables (B.4.29)

&sampling_output_variables (B.4.30)

&sampling_parameters (B.4.31)

&spatial_avg (B.4.32)

&slice_data (B.4.33)

Overset grid systems and rotorcraft simulation:

&overset_data (B.4.34)

&rotor_data (B.4.35)

Grid adaptation:

&adapt_metric_construction (B.4.36)

&adapt_mechanics (B.4.37)

Design optimization cost functions:

&massoud_output (B.4.38)

&sonic_boom (B.4.39)

&sboom (B.4.40)

&equivalent_area (B.4.41)

&press_box_function (B.4.42)

&pstag_function (B.4.43)

&fan_distortion (B.4.44)

Other:

&special_parameters (B.4.45)

&partitioning (B.4.46)

&fwh_acoustic_data (B.4.47)

&vortex_generator (B.4.48)

B.4.1 &project

This namelist allows the user to specify the rootname of the project, which forms the majority of input and output filenames.

```
&project
  project_rootname = 'default_project'
/
```

`project_rootname = 'default_project'`

The project rootname is the root for the grid, restart, and visualization files. The manual refers to it as `[project_rootname]`. The `'default_project'` can be replaced with any filename allowed by the file system.

B.4.2 &raw_grid

This namelist specifies details of the grid format.

```
&raw_grid
  grid_format                    = 'vgrid'
  data_format                    = 'default'
  twod_mode                      = .false.
  y_coplanar_tol                 = 1.0e-11
  swap_yz_axes                   = .false.
  fieldview_coordinate_precision = 'double'
  patch_lumping                  = 'none'
  ignore_euler_number            = .false.
  mesh_diagnostics               = .false.
/
```

`grid_format = 'vgrid'`

This specifies the grid file format. See section 4 for the details on these formats. The currently supported values are:

`'fast'` for FAST .fgrid/.mapbc files.

`'vgrid'` for single- and multi-segmented VGRID .cogsg/.bc/.mapbc files.

`'fun2d'` for FUN2D.faces files.

`'aflr3'` for AFLR3 formatted, unformatted, or C-binary/Fortran-stream .ugrid/.r8.ugrid/.b8.ugrid/.mapbc files,

`'felisa'` for Felisa grid files.

`'fieldview'` for FieldView formatted or unformatted .fvgrid_fmt/.fvgrid_unf/.mapbc files.

`data_format = 'default'`

This provides the encoding of the grid file. A particular `grid_format` may only support a subset of encodings. FUN3D will stop with an error message if the `data_format` is inconsistent with the `grid_format`. The `'default'` value is changed to an admissible value based on `grid_format` as noted next to each value,

`'ascii'` ASCII text grid file. It is the default for `'felisa'` and `'fun2d'` grids.

`'unformatted'` Fortran unformatted grid file. It is the default for `'fast'`, `'vgrid'`, and `'fieldview'` grids.

`'stream'` C-binary/Fortran-stream grid file. It is the default for `'aflr3'` grids.

`'stream64'` 64 bit integer C-binary/Fortran-stream grid file.

`twod_mode = .false.`

Turns on two-dimensional mode for a single layer prism or hex grid. If `grid_format = 'fun2d'`, `twod_mode` is automatically `.true.`. Note that if `grid_format` is not `'fun2d'`, then the grid *must* have two distinct boundaries declared to be y-symmetry boundaries. A grid with both symmetry planes lumped into one boundary will not work.

`y_coplanar_tol = 1.0e-11`

This is the tolerance used to check whether points lie on a plane when `twod_mode = .true.`. If problems are encountered running a mesh in two-dimensional mode, *and* the mesh has two distinct y-symmetry boundaries as noted in `twod_mode`, try increasing this tolerance.

`swap_yz_axes = .false.`

When `.true.`, this swaps the y- and z-axes for the grid. This option can be used to rotate the grid so the z-axes is in the FUN3D convention for angle of attack and lift—see section 2. Note: The boundary conditions are applied after the rotation, which implies that symmetry and other boundary conditions should be specified for the boundary orientation of the swapped axes.

`fieldview_coordinate_precision = 'double'`

This specifies floating point precision of reals for FieldView meshes only.

`'double'` for double precision coordinates.

`'single'` for single precision coordinates.

`patch_lumping = 'none'`

This enables boundary patch lumping. It combines the grid patches into fewer patches to ease the bookkeeping of patch groups, but will effect all features that reference boundary patch numbers (e.g., `&boundary_conditions`). The .mapbc files for any of the supported grid formats may contain an optional third column of data, which specifies a family name. The exception is the VGRID.mapbc file, where the family name is mandatory and appears in the sixth column. If family names are not present in the .mapbc file, `patch_lumping` can not be `family`.

`'none'` for no patch lumping.

`'bc'` for physical boundary condition lumping.

`'family'` for family name lumping

`ignore_euler_number = .false.`

This will permit the use of grids with a failing Euler number check. See section C.9 for a description of the Euler number and its implications. Ignoring the Euler number check is not recommended.

`mesh_diagnostics = .false.`

When `.true.`, this option activates analysis of mesh elements geometry and how the shape or configuration of mesh elements could impact reconstructed gradient accuracy.

B.4.3 &force_moment_integ_properties

Reference lengths and area are defined in this namelist to scale aerodynamic force and moment data.

```
&force_moment_integ_properties
  area_reference  = 1.0
  x_moment_length = 1.0
  y_moment_length = 1.0
  x_moment_center = 0.0
  y_moment_center = 0.0
  z_moment_center = 0.0
/
```

`area_reference = 1.0`

This area is used for non-dimensionalization of forces and moments, specified in grid units squared. For a semi-span model, use half of the full configuration reference area.

`x_moment_length = 1.0`

This length in x-direction is used to nondimensionalize moments about y (pitching moment), specified in grid units.

`y_moment_length = 1.0`

This length in y-direction is used to nondimensionalize moments about x (rolling moment) and z (yawing moment), specified in grid units.

`x_moment_center = 0.0`

This specifies the x-coordinate location of moment center, in grid units.

`y_moment_center = 0.0`

This specifies the y-coordinate location of moment center, in grid units.

`z_moment_center = 0.0`

This specifies the z-coordinate location of moment center, in grid units.

B.4.4 &grid_transform

This namelist defines a constant grid translation or rotation that is applied before the start of the flow solution. For example, the original grid may be rotated to position the geometry at a different angle of attack. The translation and rotation input have limited capability to reposition the mesh; if a more complex repositioning is required, input an appropriate transform matrix instead of the simple translation or rotation parameters. Note that if `&grid_transform` is used in conjunction with `&body_transform`, the transforms specified by `&grid_transform` are applied first.

```
&grid_transform
  n_transforms       = 0
  mesh_id(:)         = 0
  ds(:)              = 0.0
  sx(:)              = 1.0
  sy(:)              = 0.0
  sz(:)              = 0.0
  theta(:)           = 0.0
  tx(:)              = 1.0
  ty(:)              = 0.0
  tz(:)              = 0.0
  x0(:)              = 0.0
  y0(:)              = 0.0
  z0(:)              = 0.0
  scale(:)           = 1.0
  transform(1,1:4,1) = 1.0, 0.0, 0.0, 0.0
  transform(2,1:4,1) = 0.0, 1.0, 0.0, 0.0
  transform(3,1:4,1) = 0.0, 0.0, 1.0, 0.0
  transform(4,1:4,1) = 0.0, 0.0, 0.0, 1.0
/
```

`n_transforms = 0`

Number of static transforms to be applied; *unless the mesh is overset*, `n_transforms > 1` *is not allowed*.

`mesh_id(:) = 0`

This selects the *component* mesh within the *composite* mesh to apply the transform to. For non-overset cases, there is only one component, and the terms 'component' and 'composite' are synonymous. Use the default for non-overset cases. A value of `mesh_id > 0` is valid only if `overset_flag = .true.`, and `mesh_id` must be unique for each of the `n_transforms` specified - multiple transforms cannot be applied to the same component mesh. For more complex transforms, input the `transform` explicitly.

`ds(:) = 0.0`

This is the translation distance.

`sx(:) = 1.0`

This is the x-component of a unit vector in the translation direction.

`sy(:) = 0.0`

This is the y-component of a unit vector in the translation direction.

`sz(:) = 0.0`

This is the z-component of a unit vector in the translation direction.

`theta(:) = 0.0`

This is the rotation angle (in degrees). A positive rotation is applied by the right hand rule with the thumb pointing in direction of rotation axis.

`tx(:) = 1.0`

This is the x-component of the rotation axis unit vector.

`ty(:) = 0.0`

This is the y-component of the rotation axis unit vector.

`tz(:) = 0.0`

This is the z-component of the rotation axis unit vector.

`x0(:) = 0.0`

This is the x-coordinate of the rotation origin.

`y0(:) = 0.0`

This is the y-coordinate of the rotation origin.

`z0(:) = 0.0`

This is the z-coordinate of the rotation origin.

`scale(:) = 1.0`

This a scale factor applied to all coordinate values.

`transform(1,1:4,1) = 1.0, 0.0, 0.0, 0.0`

This is a 4x4 transform matrix (see for example [28]).

B.4.5 &body_transform

This namelist defines a constant body translation or rotation that is applied before the start of the flow solution. For example, the original body may be rotated to position the geometry at a different effective angle of attack. The translation and rotation input have limited capability to reposition the body; if a more complex repositioning is required, input an appropriate transform matrix instead of the simple translation or rotation parameters. Note that if `&body_transform` is used in conjunction with `&grid_transform`, the transforms specified by `&grid_transform` are applied first. After repositioning the body, the mesh is deformed once to reflect the new position of the body, before beginning the solution.

```
&body_transform
  n_bodies           = 0
  mesh_id(:)         = 0
  nbndry(:)          = 0
  boundary_list(:)   = ''
  ds(:)              = 0.0
  sx(:)              = 1.0
  sy(:)              = 0.0
  sz(:)              = 0.0
  theta(:)           = 0.0
  tx(:)              = 1.0
  ty(:)              = 0.0
  tz(:)              = 0.0
  x0(:)              = 0.0
  y0(:)              = 0.0
  z0(:)              = 0.0
  transform(1,1:4,1) = 1.0, 0.0, 0.0, 0.0
  transform(2,1:4,1) = 0.0, 1.0, 0.0, 0.0
  transform(3,1:4,1) = 0.0, 0.0, 1.0, 0.0
  transform(4,1:4,1) = 0.0, 0.0, 0.0, 1.0
/
```

`n_bodies = 0`

This is the number of bodies that are to be repositioned at the start of the computation.

`mesh_id(:) = 0`

This selects the *component* mesh within the *composite* mesh that the body belongs to. For non-overset cases, there is only one component, and the terms 'component' and 'composite' are synonymous. Use the default for non-overset cases. A value of `mesh_id > 0` is valid only if `overset_flag = .true.`. The value of `mesh_id` is used to determine if

this body should inherit a static grid transform from a transform specified in the `&grid_transform` namelist, which has the same value of `mesh_id`.

`nbndry(:) = 0`

This is the number of boundary patches listed for a given body.

`boundary_list(:) = ''`

This is a list of boundary patch numbers for a given body. Commas and dashes can be used to specify ranges, i.e., `'1,2,5-7'`.

`ds(:) = 0.0`

This is the translation distance.

`sx(:) = 1.0`

This is the x-component of a unit vector in the translation direction.

`sy(:) = 0.0`

This is the y-component of a unit vector in the translation direction.

`sz(:) = 0.0`

This is the z-component of a unit vector in the translation direction.

`theta(:) = 0.0`

This is the rotation angle (in degrees). A positive rotation is applied by the right hand rule with the thumb pointing in direction of rotation axis.

`tx(:) = 1.0`

This is the x-component of the rotation axis unit vector.

`ty(:) = 0.0`

This is the y-component of the rotation axis unit vector.

`tz(:) = 0.0`

This is the z-component of the rotation axis unit vector.

`x0(:) = 0.0`

This is the x-coordinate of the rotation origin.

`y0(:) = 0.0`

This is the y-coordinate of the rotation origin.

`z0(:) = 0.0`

This is the z-coordinate of the rotation origin.

`transform(1,1:4,1) = 1.0, 0.0, 0.0, 0.0`

This is a 4x4 transform matrix (see for example [28]).

B.4.6 &governing_equations

This namelist specifies the equation set that describes underlying physics of the problem.

```
&governing_equations
  eqn_type                = 'compressible'
  artificial_compress     = 15.0
  viscous_terms           = 'turbulent'
  chemical_kinetics       = 'finite-rate'
  thermal_energy_model    = 'non-equilib'
  prandtlnumber_molecular = 0.72
  schmidt_number          = -1.
  gas_radiation           = 'off'
  rad_use_impl_lines      = .false.
  multi_component_diff    = .false.
/
```

`eqn_type = 'compressible'`

This specifies the set of governing equations to be solved.

`'compressible'` for compressible, calorically perfect gas. See section 2.1 for equations and nondimensionalization.

`'incompressible'` for incompressible, calorically perfect gas. [29] See section 2.2 for equations and nondimensionalization. The incompressible solution is affected by the choice of `artificial_compress`, see the description of this parameter for details.

`'generic'` for multispecies, reacting gas simulations. See section 2.3 for nondimensionalization. The `tdata` input file is required. Fun3D is usually distributed with the `'generic'` option disabled. If it is required, see section 1.4 for information on obtaining the version of Fun3D with this capability.

`artificial_compress = 15.0`

This is the artificial compressibility factor, β, which is only used by the `eqn_type = 'incompressible'`. This parameter must be in the range of $(100, 1)$. See Anderson, Rausch, and Bonhaus [29] for details. The sensitivity of the solution to this parameter will decrease with mesh refinement, so consider a refined grid if an unacceptable amount of sensitivity is experienced. A high sensitivity to this parameter can also indicate that the problem is actually compressible and the user is encouraged to check the incompressible solution by performing a low Mach compressible simulation.

`viscous_terms = 'turbulent'`

This describes the modeling of the viscosity term in the governing equations.

`'inviscid'` no viscosity, for inviscid flow.

`'laminar'` apply laminar viscosity, to model laminar flow.

`'turbulent'` include laminar viscosity and model turbulent flow with a `&turbulent_diffusion_models`.

`chemical_kinetics = 'finite-rate'`

This describes the chemical kinetics, only used when `eqn_type = 'generic'`.

`'frozen'` for frozen chemical compositions.

`'finite-rate'` for finite-rate reacting gases.

`thermal_energy_model = 'non-equilib'`

This describes the thermal energy model, only used when `eqn_type = 'generic'`.

`'frozen'` for frozen chemical compositions.

`'non-equilib'` for non-equilibrium gases.

`prandtlnumber_molecular = 0.72`

This is the molecular Prandtl number. It must be greater than zero.

`schmidt_number = -1.`

This is the Schmidt number used in the generic gas path. If the user wants to override the default path of computing a variable Schmidt number from collision cross sections then use this parameter to specify the constant Schmidt number.

`gas_radiation = 'off'`

This controls flow field radiation coupling. When active, this option will compute radiation source terms and surface heat fluxes after the first time step. Radiation source terms are not further updated during the rest of the time steps. Radiation source terms are not stored in the restart file, so they need to be recalculated when restarting simulations that include flow field radiation. Only for `eqn_type = 'generic'`.

`'off'` no radiation calculations.

`'uncoupled'` will use the HARA program to compute radiative surface heat fluxes, but radiation source terms would not be included in the flow-field governing equations.

`'coupled'` will include radiation source terms in the governing equations, with the divergence of the radiative flux being computed by the

HARA program. Requires `rad_use_impl_lines = .true.`; only valid if all of the domain nodes are included in one and only one line as defined by the implicit lines file.

`rad_use_impl_lines = .false.`

For `gas_radiation`, the mesh nodes in the lines of sight are read from the implicit lines file. Coupled radiation must use this option. For uncoupled radiation, the lines of sight can either be read from the implicit lines file when `.true.`, or the lines of sight will be generated during the FUN3D run when `.false`. Only for `eqn_type = 'generic'`.

`multi_component_diff = .false.`

When `.true.`, engage multi-component diffusion using sub-iteration of Stefan-Maxwell Equations as described by Sutton and Gnoffo. [30] Otherwise, use binary diffusion with mass fraction averaged correction to force sum of diffusion flux to equal zero. Only for `eqn_type = 'generic'`.

B.4.7 &reference_physical_properties

This namelist is used to specify reference conditions and nominal freestream flow conditions in a user-defined unit system. It is also used to convert between grid units and flow solver units.

```
&reference_physical_properties
  dim_input_type        = 'nondimensional'
  gridlength_conversion = 1.0
  mach_number           = 0.0
  vinf_ratio            = 1.0
  reynolds_number       = 0.0
  velocity              = 0.0
  density               = 0.0
  temperature           = 273.0
  temperature_units     = 'Kelvin'
  angle_of_attack       = 0.0
  angle_of_yaw          = 0.0
/
```

`dim_input_type = 'nondimensional'`

This is the system of measurement for the reference conditions. Currently, it must be `'dimensional-SI'` for `eqn_type = 'generic'` and `'nondimensional'` otherwise. This input is intended for future expansion. The temperature is always input as a dimensional quantity.

`'nondimensional'` requires `mach_number` and `reynolds_number` to be defined.

`'dimensional-SI'` requires dimensional `velocity` and `density` to be defined.

`gridlength_conversion = 1.0`

For `dim_input_type = 'dimensional-SI'`, this is the conversion factor to scale the grid and it should be set to meters per grid unit. It is used for providing heat flux in proper units and other tasks. For `dim_input_type = 'nondimensional'`, this should be set to 1.0, because the grid is already in nondimensional grid units.

`mach_number = 0.0`

This is the reference Mach number defined as velocity/speed-of-sound. It is only allowed for `dim_input_type` = `'nondimensional'` and `eqn_type = 'compressible'`. It must be set to a positive value.

`vinf_ratio = 1.0`

This is a multiplicative factor that is applied to the reference velocity. The effective freestream velocity for the simulation is then `vinf_ratio` ×

reference_velocity. The default value of vinf_ratio gives a freestream velocity identical to the reference velocity. Note that for eqn_type = 'compressible', the reference velocity has magnitude mach_number, while for eqn_type = 'incompressible', the reference velocity has magnitude 1. For either eqn_type, a value of vinf_ratio different from unity allows distinct freestream and reference conditions. This is often used, for example, in rotorcraft simulations where the tip Mach number is taken as the reference Mach number, while the freestream Mach number reflects the forward speed. vinf_ratio is not applicable to eqn_type = 'generic'

reynolds_number = 0.0

This is the reference Reynolds number, per one unit of the grid. Not correctly accounting for the unit of the grid has been a point of confusion in the past. For example, when the grid units are feet, Reynolds number should be specified per foot. This input is only used if dim_input_type = 'nondimensional' and is ignored by eqn_type = 'generic'. It must be set to a positive value.

velocity = 0.0

This is the reference velocity, in m/s. Only used for dim_input_type = 'dimensional-SI' and eqn_type = 'generic'.

density = 0.0

This is the reference density, in kg/m^3. Only used for dim_input_type = 'dimensional-SI' and eqn_type = 'generic'.

temperature = 273.0

This is the reference temperature, in units of temperature_units.

temperature_units = 'Kelvin'

The units used to specify temperature.

'Kelvin' for SI units.

'Rankine' for the English system.

angle_of_attack = 0.0

This is the freestream angle of attack in degrees.

angle_of_yaw = 0.0

This is the freestream angle of yaw (side-slip) in degrees.

B.4.8 &noninertial_reference_frame

FUN3D can perform simulations in noninertial reference frame rotating at a constant rate, Ω. The noninertial reference frame simulation can be run as a steady state problem if the freestream velocity crossed with the rotation vector is zero, $\mathbf{U}_\infty \times \Omega = 0$. In a practical sense, freestream velocity should be zero or parallel to the axis of rotation. Using a standard inertial reference frame requires the same problem to be run as an unsteady simulation at a larger computational cost. Typical uses would be the simulation of an isolated rotor in hover (without forward motion) or an aircraft performing a steady-state pitching maneuver or constant roll about the wind axis.

```
&noninertial_reference_frame
  noninertial              = .false.
  rotation_center_x        = 0.0
  rotation_center_y        = 0.0
  rotation_center_z        = 0.0
  rotation_rate_x          = 0.0
  rotation_rate_y          = 0.0
  rotation_rate_z          = 0.0
  noninertial_frame_output = .true.
/
```

`noninertial = .false.`

When `.true.`, use a noninertial reference frame. The default is the inertial reference frame.

`rotation_center_x = 0.0`

This is the x of the steady rotation rate center point.

`rotation_center_y = 0.0`

This is the y of the steady rotation rate center point.

`rotation_center_z = 0.0`

This is the z of the steady rotation rate center point.

`rotation_rate_x = 0.0`

This is the steady noninertial rotation rate (nondimensional) about the rotation center x-axis. For `eqn_type = 'compressible'`, the nondimensional rate is $\omega = \omega^* \frac{L^*_{ref}}{a^*_{ref} L_{ref}}$, where ω^* is the dimensional rotation rate about the rotation center x-axis, in rad/sec. For `eqn_type = 'incompressible'`, the nondimensional rate is $\omega = \omega^* \frac{L^*_{ref}}{V^*_{ref} L_{ref}}$; see also section 2.

`rotation_rate_y = 0.0`

This is the steady noninertial rotation rate (nondimensional) about the rotation center y-axis. For `eqn_type = 'compressible'`, the nondimensional rate is $\omega = \omega^* \frac{L^*_{ref}}{a^*_{ref} L_{ref}}$, where ω^* is the dimensional rotation rate about the rotation center y-axis, in rad/sec. For `eqn_type = 'incompressible'`, the nondimensional rate is $\omega = \omega^* \frac{L^*_{ref}}{V^*_{ref} L_{ref}}$; see also section 2.

`rotation_rate_z = 0.0`

This is the steady noninertial rotation rate (nondimensional) about the rotation center z-axis. For `eqn_type = 'compressible'`, the nondimensional rate is $\omega = \omega^* \frac{L^*_{ref}}{a^*_{ref} L_{ref}}$, where ω^* is the dimensional rotation rate about the rotation center z-axis, in rad/sec. For `eqn_type = 'incompressible'`, the nondimensional rate is $\omega = \omega^* \frac{L^*_{ref}}{V^*_{ref} L_{ref}}$; see also section 2.

`noninertial_frame_output = .true.`

When `.true.`, visualization output is left in the noninertial reference frame. In this frame, the velocity on (viscous) solid surfaces will be zero, and farfield boundaries will have velocity components that vary as $\omega \times R$, where R is the distance from the rotation axis. When `.false.`, visualization output is converted to the inertial frame. In the inertial frame, the velocity on (viscous) solid surfaces will vary as $\omega \times R$, and farfield boundaries will have (nominally) zero velocity components.

B.4.9 &inviscid_flux_method

This namelist controls the construction of the inviscid fluxes and flux Jacobians.

```
&inviscid_flux_method
  flux_construction        = 'roe'
  flux_construction_lhs    = 'vanleer'
  kappa_umuscl             = -1.0
  flux_limiter             = 'none'
  smooth_limiter_coeff     = 1.0
  freeze_limiter_iteration = -1
  first_order_iterations   = 0
  multidm_option           = 1
  fixed_direction          = .true.
  recalc_dir_freq          = 1
  adptv_entropy_fix        = .false.
  rhs_u_eigenvalue_coef    = 0.
  lhs_u_eigenvalue_coef    = 0.
  rhs_a_eigenvalue_coef    = 0.
  lhs_a_eigenvalue_coef    = 0.
  entropy_fix              = .false.
  temperature_fix          = .false.
  re_min_vswch             = 50.
  re_max_vswch             = 500.
  pole_gradient            = .false.
/
```

`flux_construction = 'roe'`

This specifies the inviscid flux residual construction method.

`'roe'` for Roe flux difference splitting.

`'vanleer'` for van Leer flux vector splitting.

`'hllc'` for HLLC.

`'aufs'` for AUFS.

`'ldfss'` for LDFSS.

`'dldfss'` for dissipative LDFSS.

`'aldfss'` for LDFSS with an adaptive entropy fix.

`'roe_ec'` for entropy-consistent Roe scheme.

`'stvd'` for Yee's symmetric total variation diminishing scheme. Not compatible with turbulence for `eqn_type = 'compressible'`.

`'stvd_modified'` for a modified version of STVD.

`'multidm'` for Gnoffo's multidimensional scheme.

`flux_construction_lhs = 'vanleer'`

This specifies the inviscid flux Jacobian construction method. A `'consistent'` method yields the best asymptotic iterative convergence rate of the nonlinear residual, but a more diffusive flux may stabilize a poorly converging or diverging linear system iterative scheme.

`'consistent'` for a consistent linearization with the residual construction method.

`'vanleer'` for Van Leer.

`'roe'` for Roe linearization.

`'hllc'` for HLLC.

`'aufs'` for AUFS.

`'ldfss'` for LDFSS.

`kappa_umuscl = -1.0`

Controls the amount of upwinding in the unstructured-grid MUSCL reconstruction scheme. The default will adjust `kappa_umuscl` internally to 0.5 for 3D mixed-element grids or 0.0 for all other grid types. 0.0 is the upwind-biased (Fromm) discretization, 1.0 is the (unstable) central-difference discretization, and the range [0,1] is a blend of the two.

`flux_limiter = 'none'`

This selects the flux limiter. The limiters that begin with the letter `h`, `'barth'`, and `'venkat'` are stencil-based limiters (they apply a limiter to each edge in a node's the reconstruction stencil and store the most restrictive edge limiter value at the node). Other limiters are evaluated in a strictly edge-based manner. The `h`-series of limiters automatically turns on a heuristic pressure based limiter that is used to augment the selected flux limiter. [31] The node-based limiters can be frozen with the `freeze_limiter_iteration` namelist variable described below. Note: The adjoint solver is only compatible with a frozen limiter flow solution. For hypersonic flows computed using the calorically perfect gas path, the `hvanleer` or `hvanalbada` flux limiters are recommended. The smooth class of limiters use the `smooth_limiter_coeff` as noted in the limiter descriptions.

`'none'` for no limiter.

`'barth'` for the Barth limiter.

`'venkat'` for the Venkatakrishnan [32] limiter. This limiter relies on a user-tunable parameter, `smooth_limiter_coeff`.

`'hminmod'` for the stencil-based min-mod limiter augmented with a heuristic pressure limiter.

`'hvanleer'` for the stencil-based van Leer limiter augmented with a heuristic pressure limiter.

`'hvanalbada'` for the stencil-based van Albada limiter augmented with a heuristic pressure limiter. This limiter relies on a user-tunable parameter, `smooth_limiter_coeff`.

`'hvenkat'` for the Venkatakrishnan limiter augmented with a heuristic pressure limiter. This limiter relies on a user-tunable parameter, `smooth_limiter_coeff`.

`'minmod'` for the min-mod limiter.

`'vanleer'` for the van Leer limiter.

`'vanleer_gg'` for van Leer limiter that also turns on Green-Gauss gradients for inviscid reconstruction.

`'vanalbada'` for the van Albada limiter.

`smooth_limiter_coeff = 1.0`

This is the coefficient used to tune smooth limiters, such as `'venkat'`. Larger values of `smooth_limiter_coeff` reduce the effect of the limiter, tending toward the unlimited solution, with (typically) better convergence properties at the expense of increased oscillations near shocks. This class of smooth limiters assume that the geometry in the mesh is O(1), i.e., that the grid is normalized to a characteristic length of your model. When the geometry is not O(1), a suggested value for `smooth_limiter_coeff` is proportional to the reciprocal of a characteristic length, e.g., proportional to 1/(Mean Aerodynamic Chord). By way of example, assume you have a grid in which the mean aerodynamic chord is 1.0, and you were satisfied with the solution properties and convergence with a value of `smooth_limiter_coeff` = 3.0. Then assume you scale this mesh so that the mean aerodynamic chord is 10.0. Running the scaled mesh at the same flow conditions would require that `smooth_limiter_coeff` = 3.0/10.0 to achieve the same solution properties and convergence as the unscaled mesh.

`freeze_limiter_iteration = -1`

The node-based limiters can be frozen with `freeze_limiter_iteration` equal to zero or an iteration number. A negative value does not freeze the limiter. Zero is used to retain the limiter field contained in the restart file. Freezing a limiter can reduce nonlinear iterative convergence "ringing." [32] Freezing is typically engaged at 3/4 of the iterations required for convergence. The steady decline of the low frequency residual modes tend to continue at similar rate with or without freezing, you just can't see it in the ringing residual norm. The later you wait to freeze the

limiter, the closer the frozen limiter solution is to the converged answer. If a unrealizable reconstruction (negative density or pressure) is encountered the limiter field will be locally updated at the node experiencing the problematic reconstruction. The adjoint solver is only compatible with a frozen limiter.

`first_order_iterations = 0`

This is the number of iterations to use first-order spatial accuracy prior to using second-order spatial accuracy. If second-order spatial accuracy in not required, set this to a value larger than the number of `steps`. This option is useful for starting difficult supersonic flow simulations. For time accurate cases (`time_accuracy` not equal to `'steady'`), this is the number of first-order accurate sub-iterations to run for each time step.

`multidm_option = 1`

This controls the `multidm` reconstruction weighting.

`'1'` virtual node averaging.

`'2'` weighted average of edges.

`fixed_direction = .true.`

This specifies the use of Cartesian directions in `multdm` reconstruction.

`recalc_dir_freq = 1`

This sets the frequency of direction recalculation in the `multidm` scheme.

`adptv_entropy_fix = .false.`

This activates the adaptive entropy fix for Roe's scheme.

`rhs_u_eigenvalue_coef = 0.`

This is the contact/shear eigenvalue smoothing coefficient for the adaptive entropy fix and the `roe` residual. It increases dissipation to improve robustness with the penalty of reduced solution accuracy.

`lhs_u_eigenvalue_coef = 0.`

This is the contact/shear eigenvalue smoothing coefficient for the adaptive entropy fix and the `roe` Jacobian. It increases dissipation to improve robustness of the linear solve with the potential penalty of reduced nonlinear convergence if it is different from `rhs_u_eigenvalue_coef`.

`rhs_a_eigenvalue_coef = 0.`

This is the acoustic eigenvalue smoothing coefficient for the adaptive entropy fix and the `roe` residual. It increases dissipation to improve robustness with the penalty of reduced solution accuracy.

`lhs_a_eigenvalue_coef = 0.`

This is the acoustic eigenvalue smoothing coefficient for the adaptive entropy fix and the `roe` Jacobian. It increases dissipation to improve robustness of the linear solve with the potential penalty of reduced non-linear convergence if it is different from `rhs_a_eigenvalue_coef`.

`entropy_fix = .false.`

This activates the entropy fix for the `stvd` flux.

`temperature_fix = .false.`

This activates the temperature fix for undershoots with the `stvd` flux.

`re_min_vswch = 50.`

For the `stvd` flux, eigenvalue limiting is turned off below this cell Reynolds number.

`re_max_vswch = 500.`

For the `stvd` flux, eigenvalue limiting is fully engaged above this cell Reynolds number.

`pole_gradient = .false.`

If true, use limiting form of continuity equation across pole in association with `symmetry_1_strong`, `symmetry_2_strong`, or `symmetry_3_strong`.

B.4.10 &turbulent_diffusion_models

When `viscous_terms = 'turbulent'`, this namelist is used to set the form of the turbulence model.

```
&turbulent_diffusion_models
  turbulence_model        = 'sa'
  turb_model              = 'deprecated-use-turbulence_model'
  turb_intensity          = -0.001
  turb_viscosity_ratio    = -0.001
  reynolds_stress_model   = 'linear'
  turb_compress_model     = 'off'
  turb_conductivity_model = 'off'
  prandtlnumber_turbulent = 0.9
  schmidtnumber_turbulent = 1.
  miv_hrles               = .false.
  dw_rans                 = 0.2
  dw_les                  = 0.4
  strelets_des            = .false.
/
```

`turbulence_model = 'sa'`

This selects the form of the turbulence model. The naming convention of http://turbmodels.larc.nasa.gov/ is used for the models described on the website.

`'sa'` for Spalart-Allmaras model. [33] See the `&spalart` namelist in section B.4.11 for additional controls.

`'sa-catris'` for Spalart-Allmaras Catris-Aupoix model. [34]

`'des'` for Spalart-Allmaras based DES model. [35] See the `&spalart` namelist in section B.4.11 for additional controls. Not available for `eqn_type='generic'`.

`'sa-neg'` for Spalart-Allmaras model with negative turbulence variable provisions. [36] Not available for `eqn_type='generic'`.

`'des-neg'` for Spalart-Allmaras based DES model with negative turbulence variable provisions. [35,36] Not available for `eqn_type='generic'`.

`'menter-sst'` option is no longer valid, use `sst` or `sst-v`

`'bsl'` Menter Baseline Two-Equation Model. [37]

`'sst'` Menter SST Two-Equation Model with strain source term. [37]

`'sst-v'` Menter SST Two-Equation Model with vorticity source term. [38] Not available for `eqn_type='generic'`.

`'wilcox1988'` Wilcox (1988) k-omega Two-Equation Model. [39] Not available for `eqn_type='generic'`.

`'wilcox1988-v'` Wilcox (1988) k-omega Two-Equation Model with vorticity source term. [39] Not available for `eqn_type='generic'`.

`'wilcox2006'` Wilcox (2006) k-omega Two-Equation Model. [40] Not available for `eqn_type='generic'`.

`'wilcox2006-v'` Wilcox (2006) k-omega Two-Equation Model with vorticity source term. [40] Not available for `eqn_type='generic'`.

`'kw-des'` for SST-kω based DES model, the kω based: Strelets DES [41] model and the model invariant hybrid RANS-LES method of Woodruff [42].

`'hrles'` for Menter SST-based hybrid-RANS/LES model. [43, 44] Does not work with `eqn_type='generic'`.

`'gamma-ret-sst'` for Langtry and Menter SST transition model. [45] See the `&gammaretsst` namelist in section B.4.12 for additional controls. Not available for `eqn_type='generic'`.

`'k-kL-MEAH2015'` for Menter/Egorov and Abdol-Hamid two-equation k-kL model. [46] Not available for `eqn_type='generic'`.

`'baldwin-lomax'` Baldwin-Lomax algebraic model. Available only for `eqn_type='generic'`.

`'cebeci-smith'` Cebeci-Smith algebraic model. Available only for `eqn_type=generic`.

`turb_model = 'deprecated-use-turbulence_model'`

This is a deprecated namelist variable for `turbulence_model`. It is included for backwards compatibility with fun3d.nml files, but may be removed in a future version.

`turb_intensity = -0.001`

This sets the freestream turbulence intensity, $\sqrt{\frac{2k}{3u_\infty^2}}$, where k is the turbulent kinetic energy. Negative value forces `turb_intensity` $= \sqrt{\frac{0.01\mu_0}{1.5}}$ and `turb_viscosity_ratio` $= \rho_0 0.005$ yielding $(\rho k)_0 = 0.01\mu_0$ and $(\rho\omega)_0 = 2$. Only applies to `eqn_type='generic'`.

`turb_viscosity_ratio = -0.001`

This sets the freestream ratio of turbulent viscosity to molecular viscosity. Negative value forces `turb_intensity` $= \sqrt{\frac{0.01\mu_0}{1.5}}$ and `turb_viscosity_ratio` $= \rho_0 0.005$ yielding $(\rho k)_0 = 0.01\mu_0$ and $(\rho\omega)_0 = 2$. Only applies to `eqn_type='generic'`.

`reynolds_stress_model = 'linear'`

This controls the mean stress-strain constitutive relation.

`'linear'` indicates the use of the linear Boussinesq assumption.

`'qcr'` activates the Quadratic Constitutive Relationship (QCR) 2000 version of Spalart. [47] This nonlinear model is not valid for explicit algebraic Reynolds stress or full Reynolds stress transport models (e.g., ASM, EASM, RSM models).

`'cubic_equation'` solves a cubic equation for the stress-strain assumption at each point in the flow field based on Rumsey and Gatski [48]. It is only implemented for k-kL turbulence models.

`turb_compress_model = 'off'`

This controls the turbulence compressibility model. Only applies to `eqn_type='generic'`.

`'off'` for no correction.

`'ssz'` for SSZ (use with Spalart-Allmaras models).

`'zeman'` for Zeman (use with $k - \epsilon$ models).

`'wilcox'` for Wilcox (use with SST-based models).

`'sarkar'` for Sarkar (use with $k - \epsilon$ models).

`turb_conductivity_model = 'off'`

This controls whether a turbulence conductivity model is employed. Only applies to `eqn_type='generic'`.

`'off'` to turn off a turbulence conductivity model.

`'on'` to turn on a turbulence conductivity model.

`prandtlnumber_turbulent = 0.9`

This is the turbulent Prandtl number.

`schmidtnumber_turbulent = 1.`

This is the turbulent Schmidt number. Only applies to `eqn_type='generic'`.

`miv_hrles = .false.`

This invokes the model invariant $k-\omega$ based hybrid RANS-LES method of Woodruff [42]. This option can only be combined with `turbulence_model='kw-des'`.

`dw_rans = 0.2`

This is the distance from wall at which the RANS regions ends for `miv_hrles=.true.`, the model invariant hybrid RANS-LES method of Woodruff [42].

`dw_les = 0.4`

This is the distance from wall at which the LES region starts for `miv_hrles= .true.`, the model invariant hybrid RANS-LES method of Woodruff [42].

`strelets_des = .false.`

This invokes the Strelets kw-des model [41] when set to `.true`. This option can only be combined with `turbulence model = 'kw-des'`.

B.4.11 &spalart

This namelist is used to modify details of the SA and SA based DES turbulence models.

```
&spalart
  turbinf                     = 3.0
  dacles_mariani              = .false.
  sarc                        = .false.
  ddes                        = .false.
  ddes_mod1                   = .false.
  cddes                       = 0.975
  use_least_squares_gradients = .false.
/
```

turbinf = 3.0

This is the freestream turbulence value for the SA model.

dacles_mariani = .false.

This activates the Dacles-Mariani [49, 50] rotation correction (denoted SA-R by http://turbmodels.larc.nasa.gov/).

sarc = .false.

This activates the rotation/curvature correction [51] (denoted SA-RC by http://turbmodels.larc.nasa.gov/).

ddes = .false.

This changes the `turbulence_model='des'` into Delayed DES [52] (DDES).

ddes_mod1 = .false.

This changes the `turbulence_model='des'` into Modified Delayed DES [53] (MDDES). It also requires `ddes = .true`. This option should be used with caution. Most experience with this model is for large separated flows encountered in wake regions of bluff bodies, such as cylinders and landing gears. Further validation is required for other situations. There is sensitivity to the parameter `cddes`.

cddes = 0.975

This is C_{MDD} in [53]. It used with the `ddes_mod1 = .true`.

use_least_squares_gradients = .false.

The default method for calculating the velocity gradients used in the multi-equation turbulence models is the edge-based Green-Gauss. For linear functions, the Green-Gauss routines will provide exact gradients for tetrahedral grids. Reconstruction of the gradients on non-tetrahedral

elements may have some error associated with them. Similarly, the default method for calculating gradients of the turbulence variables is edge-based Green-Gauss. Again, for linear functions on tetrahedral grids the gradients will be exact. When the mesh has other element types, such as hexahedra, prisms or pyramids, the edge-based Green-Gauss may not produce very accurate gradients. The accuracy is very dependent upon the exact shape of the elements, the nature of the flow and simulation, and the placement in the mesh overall. Setting `use_least_squares_gradients = .true.`, the code will calculate the velocity gradients used in the turbulence models and turbulence variable gradients via weighted least squares and least squares routines, respectively. For linear functions, the least squares methods should produce exact gradients with mixed element types.

B.4.12 &gammaretsst

This namelist modifies the details of the `turbulence_model = 'gamma-ret-sst'` transition turbulence model of Langtry and Menter. [45] Correctly setting the freestream levels of turbulence is key to the transition location of this model. Ideally, freestream turbulence levels are measured in an experiment.

```
&gammaretsst
  set_k_inf_w_turb_intsty_percnt = -1.0
  set_w_inf_w_eddyviscosity      = -1.0
/
```

`set_k_inf_w_turb_intsty_percnt = -1.0`

This is the freestream turbulence level as a percentage. A negative value uses the default $k_\infty = 9 \times 10^{-9}$. A positive value will set $k_\infty = 1.5 \times (0.01 \times M \times \texttt{set_k_inf_w_turb_intsty_percnt})^2$.

`set_w_inf_w_eddyviscosity = -1.0`

This is the freestream eddy viscosity as the ratio between turbulent eddy viscosity to laminar viscosity. A negative value uses the default $w_\infty = 10^{-6}$. A positive value will set $\omega_\infty = k_\infty/\texttt{set_w_inf_w_eddyviscosity}$. If not available, a value in the range of 0.05 to 5 is commonly used, but the appropriate value is case specific.

B.4.13 &code_run_control

This namelist controls the length of the simulation. Restart options, Jacobian update strategy, and angle of attack continuation can also be specified.

```
&code_run_control
  steps                      = 500
  stopping_tolerance         = 1.e-15
  duration_limit_in_minutes  = -1.0
  no_restart                 = .false.
  restart_write_freq         = 250
  restart_read               = 'on'
  smart_jupdate              = .true.
  jacobian_eval_freq         = 0
  jupdate_startup_steps      = 10
  jupdate_amut_max_change    = 0.10
  jupdate_cfl_inv_change     = 5.0
  dfduc3_jacobians           = .false.
  alpha_sweep                = .false.
  cycle_increment            = 50
  alpha_increment            = 0.25
  alpha_max                  = 180.0
  alpha_min                  = -180.0
  alpha_switchbacks          = 0
  write_steady_restart       = .false.
  sd_file_format             = 'ascii'
  use_vector_intrinsics      = .false.
/
```

`steps = 500`

This is the number of time steps or steady iterations to perform.

`stopping_tolerance = 1.e-15`

This instructs the solver to terminate before all `steps` are complete when the root mean square (RMS) of every equation (continuity, energy, etc.) is less than this tolerance.

`duration_limit_in_minutes = -1.0`

This is the maximum run duration limit in minutes (a negative value is unlimited). This limit can terminate the solver before all `steps` are complete, which may be helpful if the solver is run as a batch system job with a time limit. Additional time is required to complete the current iteration and write restart file. So, allow an extra time margin for code shutdown. MPI required.

`no_restart = .false.`

When this is `.true.`, no restart checkpoint file is written.

`restart_write_freq = 250`

The restart checkpoint and convergence history files will be written to disk every `restart_write_freq` time steps of the current run.

`restart_read = 'on'`

This defines the solution at the first time step.

`'on'` to initialize the simulation with a solution read from the restart file. The current convergence history will be concatenated with the prior solution history.

`'on_nohistorykept'` to initialize the simulation with a solution read from the restart file. The previous history (e.g., residuals, forces, moments) will be discarded.

`'off'` for no restart file read. The solution will be initialized as freestream or as specified in the `&flow_initialization` namelist.

`smart_jupdate = .true.`

This option allows the code to automatically adjust the Jacobian update frequency based on residual reduction.

`jacobian_eval_freq = 0`

This is the frequency of Jacobian evaluation based on time steps. It should be set to zero when `smart_jupdate = .true`.

`jupdate_startup_steps = 10`

The Jacobians are evaluated at every time step for the first `jupdate_startup_steps`, which aids robustness during initial start transients.

`jupdate_amut_max_change = 0.10`

For turbulent flow when the maximum eddy viscosity is greater than 1.5, the Jacobians are refreshed when the maximum eddy viscosity changes by this amount from the maximum eddy viscosity corresponding to the last jacobian evaluation.

`jupdate_cfl_inv_change = 5.0`

The Jacobians are refreshed when the time term associated with the cfl of the adaptive strategy and the time term of the last jacobian evaluation differ by this amount.

`dfduc3_jacobians = .false.`

This option only affects `eqn_type = 'incompressible'`. When `.true.`, approximate Jacobians are computed that may improve the convergence of some cases.

`alpha_sweep = .false.`

This option activates a procedure to adjust `angle_of_attack` during a simulation. It can be used to calculate a drag polar in a single execution or explore a hysteresis loop. The starting `angle_of_attack` for the sweep is the angle specified in the `&reference_physical_properties` namelist. The sweep is controlled by the following options.

`cycle_increment = 50`

When `alpha_sweep=.true`,

`cycle_increment` < 0 increments `angle_of_attack` after residuals have reached the `stopping_tolerance`.

`cycle_increment` > 0 is the number of iterations between increments to alpha.

`cycle_increment` $= 0$ is an inadmissible value.

`alpha_increment = 0.25`

When `alpha_sweep=.true.`, increment `angle_of_attack` by these many degrees at a point controlled by `cycle_increment`.

`alpha_max = 180.0`

When `alpha_sweep=.true.`, this is the maximum value of `angle_of_attack`.

`alpha_min = -180.0`

When `alpha_sweep=.true.`, this is the minimum value of `angle_of_attack`.

`alpha_switchbacks = 0`

When `alpha_sweep=.true.`, this is the number of directional changes in the `angle_of_attack` sweep. When `alpha_switchbacks` > 0, `alpha_increment` is changed in sign after reaching `alpha_max` or `alpha_min`. This allows exploration of hysteresis loops.

`write_steady_restart = .false.`

When `write_steady_restart=.true.`, and running a time-accurate simulation (`itime\=0`), this will cause a steady-state restart file to be written, rather than an unsteady restart file. This steady-state restart file allows the steady-state solver to be used on subsequent executions. Warning, solution time history will be discarded.

`sd_file_format = 'ascii'`

Specifies the format of mesh sensitivity files. See section 9.3 for details.

`'ascii'` for ASCII formatted mesh sensitivity files.

`'stream'` for Fortran-stream (C-binary) formatted mesh sensitivity files.

`use_vector_intrinsics = .false.`

This option instructs FUN3D to use optimized AVX-512 vector intrinsics for AVX-512-enabled processors. FUN3D must be configured and built as described in section A.5 to use this option.

B.4.14 &nonlinear_solver_parameters

This namelist defines the temporal accuracy of the solution advancement scheme. The subiterations and time step size of time accurate simulations can also be specified. The ramping of the pseudo time advancement CFL number is also set. Density and pressure floors on the update and relation factors are available.

```
&nonlinear_solver_parameters
  time_accuracy              = 'steady'
  time_step_nondim           = 0.0
  time_step_dpsi             = -1.0
  rotor_sets_time_step       = 1
  subiterations              = 0
  temporal_err_control       = .false.
  temporal_err_floor         = 0.1
  legacy_temp_err_checks     = .true.
  schedule_iteration(1:2)    = 1, 50
  schedule_cfl(1:2)          = 200.0, 200.0
  schedule_cflturb(1:2)      = 50.0, 50.0
  f_allow_minimum_m          = 0.01
  invis_relax_factor         = 1.0
  visc_relax_factor          = 1.0
  divergence_source_unsteady = .false.
  force_half_steps           = .true.
/
```

`time_accuracy = 'steady'`

This defines the temporal scheme.

`'steady'` for steady state calculations. This is a local time step pseudo-time advancement scheme that is not time accurate.

`'1storder'` is a first-order backward differencing scheme (backward Euler) for time-accurate temporal time integration.

`'2ndorder'` is a second-order backward differencing scheme (BDF2 in [54]) for time-accurate temporal time integration.

`'2ndorderOPT'` is an optimized second-order backward differencing (BDF2opt in [55]) for time-accurate temporal time integration. This scheme is second-order accurate in time but has an order-of-magnitude lower leading coefficient than standard BDF2.

`'3rdorder'` is a third-order backward differencing scheme (BDF3 in [54]) for time-accurate temporal integration.

`'4thorderMEBDF4'` is a fourth-order modified extended backward differencing scheme (MEBDF4 in [54]) for time-accurate temporal integration.

`time_step_nondim = 0.0`

This is the nondimensional time step for time accurate simulations. It is ignored when `time_accuracy = 'steady'`. The nondimensionalization of this parameter depends on `eqn_type`. When `eqn_type = 'compressible'`, it is $dt\frac{a_{ref}}{L}$, where a_{ref} is the reference speed of sound, and L is unit 1 of the grid. When `eqn_type = 'incompressible'` or `'generic'`, it is $dt\frac{u_{ref}}{L}$, where u_{ref} is the reference velocity. See section 2.4 for more details and guidance on appropriate values.

`time_step_dpsi = -1.0`

This is a rotorcraft-specific time step that is specified in degrees of rotation of the rotor (the first rotor if more than one) per timestep. `time_step_dpsi` is ignored if negative; if `time_step_dpsi` is positive, the value of `time_step_nondim` is replaced with a value calculated from `time_step_dpsi` and the rotor rotation rate. If more than one rotor is present, `rotor_sets_time_step` may be used to select which rotor's rotation speed is used to set the time step.

`rotor_sets_time_step = 1`

This sets which rotor is used to set the time step when `time_step_dpsi` is used. This option is only for rotorcraft simulation.

`subiterations = 0`

Number of subiterations applied to solve the implicit time integration. It is ignored when `time_accuracy = 'steady'`. A constant CFL time step is used in each subiteration. By the end of a *convergent* subiteration process the pseudo time term drops out, giving the correct temporal discretization.

`temporal_err_control = .false.`

This governs whether the specified number of `subiterations` are run for each time step (`.false.`), or, if the temporal error is monitored and the subiterations are stopped when a specified tolerance is reached (`.true.`). It is ignored when `time_accuracy = 'steady'`.

`temporal_err_floor = 0.1`

This sets the tolerance for which time-accurate subiterations are stopped. The tolerance is given as a multiplicative factor of the flow residuals (mean and turbulence). It is ignored when `time_accuracy = 'steady'`.

`legacy_temp_err_checks = .true.`

This governs the equations that are monitored for temporal error convergence. Historically, *only* the x-momentum equation and *only* the first turbulence equation have been checked for convergence. When

`legacy_temp_err_checks = .false.`, *all* mean flow equations and *all* turbulence equations are checked, so all equations must satisfy the convergence criterion set by the `temporal_err_floor` value before the subiterations are considered to be converged for the current time step. Furthermore, the legacy checks required a minimum of five subiterations to be performed, regardless of whether both x-momentum and first turbulence equations satisfied the convergence criterion. No minimum is imposed when `legacy_temp_err_checks = .false.`.

`schedule_iteration(1:2) = 1, 50`

These are the iteration or subiteration numbers at which CFL numbers are specified. When `time_accuracy = 'steady'`, this controls the CFL number of the pseudo-time terms over iterations. When running time-accurately, this controls the CFL number of the pseudo-time terms of the linear system over subiterations. The parameter `schedule_iteration(1)` must be one, because it defines the starting CFL number at the first iteration or subiteration. The actual CFL number is determined by a linear ramp from `schedule_cfl(1)` at `schedule_iteration(1)` to `schedule_cfl(2)` at `schedule_iteration(2)`. The CFL number is held constant at `schedule_cfl(2)` after `schedule_iteration(2)`.

`schedule_cfl(1:2) = 200.0, 200.0`

This controls the ramping and final CFL number of the meanflow equations. See the description for `schedule_iteration`.

`schedule_cflturb(1:2) = 50.0, 50.0`

This controls the ramping and final CFL number of the turbulence model equations. See the description for `schedule_cfl` in `schedule_iteration`.

`f_allow_minimum_m = 0.01`

This limits the solution update to prevent pressure and density from dropping below this fraction of their freestream values. Applied to `eqn_type = 'compressible'` only.

`invis_relax_factor = 1.0`

This is the relaxation factor of inviscid terms. It scales the nonlinear update of the inviscid terms by this fraction and is only used for `eqn_type = 'generic'`.

`visc_relax_factor = 1.0`

This is the relaxation factor of viscous terms. It scales the nonlinear update of the viscous terms by this fraction and is only used for `eqn_type = 'generic'`.

`divergence_source_unsteady = .false.`

This uses the compact formulation of accuracy-preserving source term quadrature for third-order edge-based discretization. [56, 57]

`force_half_steps = .true.`

This forces the time integration to advance the meanflow prior to linearizing and advancing the turbulence for compressible and incompressible perfect gas simulations. The `.true.` option emulates the behavior of 13.4 and previous versions. The `.false.` option reduces communication to improve parallel scaling.

B.4.15 &update_limits

This namelist specifies the limits in the update step and chemical source term for the generic gas path. All options in this namelist only apply for `eqn_type = 'generic'`.

```
&update_limits
  temperature_max                = 50000.0
  temperature_min                = 1.0
  density_min                    = 1.0e-06
  mass_fraction_min              = 1.0e-20
  freeze_source_frac             = 1.0e-10
  max_frac_target                = 0.5
  max_number_of_resets           = 5
  cpiv_min_factor                = 0.0001
  augment_kinetics_limiting      = .false.
  implicit_rate_limiting         = .true.
  disable_thermodynamic_warnings = .false.
  therm_fac_lim                  = 1.e+20
/
```

`temperature_max = 50000.0`

The maximum temperature allowed, in units specified by `temperature_units`.

`temperature_min = 1.0`

The minimum temperature allowed, in units specified by `temperature_units`.

`density_min = 1.0e-06`

The minimum mixture density allowed, as a fraction of the freestream density.

`mass_fraction_min = 1.0e-20`

The minimum species mass fraction allowed.

`freeze_source_frac = 1.0e-10`

Freeze the chemical source term if a species mass fraction is below this value and the source term is depleting it further.

`max_frac_target = 0.5`

Limit the fractional update of positive definite quantities by this factor in the generic gas path.

`max_number_of_resets = 5`

The maximum percentage of nodes that can hit a maximum or minimum limit, before the code terminates. Note, an integer is expected here, and is converted to a percentage (i.e., "5" means 5 percent).

`cpiv_min_factor = 0.0001`

This variable sets the minimum value of the vibrational-electronic heat capacity as a fraction of the translational-rotational heat capacity for each species `i`. In some cases, ramping this value up to 0.01 can help suppress undershoot of vibrational temperature upstream of a strong shock. The vibrational-electronic heat capacity must be positive for stability.

`augment_kinetics_limiting = .false.`

When `.true.`, augment chemical kinetic source term limiting.

`implicit_rate_limiting = .true.`

When `.true.`, limit chemical rates if extrema exist in formulation.

`disable_thermodynamic_warnings = .false.`

In the generic gas path, warnings for temperatures and densities out of normal range as well as failure of some thermodynamic sub-iterations to converge are output by default. In some cases, these warnings overwhelm the output file for an issue that is transient or expected. This flag allows the user to disable such warnings.

`therm_fac_lim = 1.e+20`

This factor limits the magnitude of the thermal relaxation rate. The default represents an essentially unlimited value. For simulations where thermal nonequilibrium is only evident at the shock front or in a highly expanded wake, the user may observe convergence problems associated with stiffness because the major part of the flowfield is in thermal equilibrium. In these cases, the stiffness can be alleviated by setting this parameter to a value which is large enough to maintain thermal equilibrium where it is appropriate but small enough that stiffness is removed. If used, a starting value of 5.e+05 is recommended. If this limiting factor is too large, stiffness is not alleviated. If this limiting factor is too small, thermal equilibration is prevented in a non-physical manner.

B.4.16 &shuffle_generic

This namelist enables a user to restart a generic gas solution with a different gas model. Shuffling an existing solution to restart a new solution may or may not save computer time or human time. Transients introduced by the abrupt change in the gas model are generally resolved quickly if the perturbations are minor, but may be overwhelming if the perturbations are too large. The new gas model may have a different number of species and/or a different number of energy equations and/or a different turbulence model. An important restriction on the use of shuffle is that the restarted solution must utilize the same number of processors as the original solution. This restriction derives from the formatting of metadata.

```
&shuffle_generic
  shuffle_enabled                = .false.
  shuffle_n_turb                 = -2
  shuffle_initial_trace_value    = 1.e-20
  shuffle_initial_low_vib_energy = 1.e-05
  shuffle_initial_turb_ke        = 1.e-05
  shuffle_initial_turb_diss      = 1.e-05
/
```

`shuffle_enabled = .false.`

Set this parameter to `.true.` if shuffling is requested.

`shuffle_n_turb = -2`

The option sets the new turbulence model type from the list below. The default value is not valid, which requires the user to change it to a valid input.

`'-1'` specifies an algebraic turbulence model.

`'0'` specifies laminar flow with no turbulence model.

`'1'` specifies the one-equation SA-Cataris turbulence model.

`'2'` specifies a two-equation turbulence model.

`shuffle_initial_trace_value = 1.e-20`

The initial trace concentration for newly added species.

`shuffle_initial_low_vib_energy = 1.e-05`

This is the initial low vibrational energy. It will be set to a new value by the thermodynamics routine in the flow solver.

`shuffle_initial_turb_ke = 1.e-05`

This is the initial turbulent kinetic energy.

`shuffle_initial_turb_diss = 1.e-05`

This is the initial turbulent dissipation rate ω.

B.4.17 &linear_solver_parameters

The FUN3D solution process involves constructing a linearization of the residual with appropriate time terms and then solving this linear system to compute the solution update. This namelist controls the solution process of this linear system. The linearization is grouped in to the meanflow equations and the turbulence model equations.

```
&linear_solver_parameters
  meanflow_sweeps   = 15
  turbulence_sweeps = 10
  linear_projection = .false.
  line_implicit     = 'off'
/
```

`meanflow_sweeps = 15`

This is the number of the linear system red-black relaxations at each steady iteration or time step of the meanflow equations when there is no turbulence model or a loosely coupled turbulence model. For `eqn_type ='generic'` or fully coupled meanflow and turbulence relaxation, this refers to all equations (meanflow and turbulence).

`turbulence_sweeps = 10`

This is the number of the linear system red-black relaxations at each steady iteration or time step of the turbulence equations, when the turbulence equations are loosely coupled. It has no effect for fully coupled meanflow and turbulence relaxation or a simulation without a turbulence model.

`linear_projection = .false.`

This options uses a Krylov projection method generalized conjugate gradient (GCR) to stabilize and improve convergence of linear system. This will execute multiple sets of red-black relaxation to form the GCR search directions, until a convergence criteria is met. The only penalty to using this option is increased execution time, which can be mitigated by reducing `meanflow_sweeps`.

`line_implicit = 'off'`

This option selects the relaxation scheme.

`'off'` uses point implicit relaxation.

`'on'` uses line implicit relaxation where lines are defined and point relaxation elsewhere. The line implicit feature requires construction of these lines prior to running FUN3D. The lines are stored in the a file named `[project_rootname].lines_fmt`, see section 4.4 for a description. The

`aflr3_line_extraction` utility is distributed with FUN3D to generate these lines.

B.4.18 &elasticity_gmres

This namelist controls the solution of the linear elasticity equations that are used for mesh deformation. Within Fun3D, a deforming mesh is modeled as a linear elastic medium, with the modulus of elasticity, E, typically taken as inversely proportional to either the distance from the nearest solid surface or the cell volume.

GMRES [58] is the preferred algorithm to use for solving the linear elasticity equations, but requires that Fun3D be configured with SPARSKIT (see section A.8.15). When configured with SPARSKIT, the native Fun3D multi-color point-solve algorithm is used as the default preconditioner for GMRES. Without SPARSKIT, or if the user elects not to use the GMRES solver, the multi-color point-solve algorithm is used as the linear-system solver. Using the point-solve algorithm without GMRES will generally result in slower convergence of the system of equations, especially for larger meshes. The default values indicated below are set based on the assumption that Fun3D has been configured with SPARSKIT, and that the linear solver used is GMRES; suggestions for appropriate values when not using GMRES are given where applicable.

If negative volumes are produced during mesh deformation, decreasing the convergence tolerance may alleviate the problem. Increasing the total number of iterations allowed may be required to reach the requested convergence level. In rare cases, a different model for the modulus of elasticity may prevent negative volumes from occurring.

For coupled CFD/CSD rotorcraft simulations, and only for this specialized subset of simulations, a faster algebraic mesh deformation scheme may be used instead of solving the elasticity PDEs.

```
&elasticity_gmres
  algebraic_mesh_deform  = .false.
  elasticity             = 1
  elasticity_exponent    = 1.0
  linear_solver          = 'gmres'
  ileft                  = 1
  preconditioner_iters   = 5
  monitor_preconditioner = .false.
  untangling_iters       = 0
  nsearch                = 50
  nrestarts              = 10
  tol                    = 1.e-6
  tol_abs                = 1.e-14
  residual_out_freq      = nsearch
  restart_deformation    = .true.
/
```

`algebraic_mesh_deform = .false.`

When `.true.`, use a simple 'algebraic' mesh deformation scheme, bypassing the slower PDE solution of the linear elasticity equations. *Note: a value of `.true.` is only valid for coupled CFD/CSD overset rotor cases.* When `.true.`, the remainder of the data in this namelist is ignored.

`elasticity = 1`

This governs which grid metric is linked to the modulus of elasticity when the mesh is modeled as an elastic medium to enable mesh deformation.

`'1'` Modulus of elasticity is based on the inverse distance from the nearest solid surface, raised to the power `elasticity_exponent`

`'2'` Modulus of elasticity is based on the inverse of the cell volume, raised to the power `elasticity_exponent`

`elasticity_exponent = 1.0`

This governs the *inverse power* to which the grid metric selected by `elasticity` is raised to determine the modulus of elasticity. For example, if wall distance (slen) is chosen as the metric, and `elasticity_exponent = 1.0` then $E = 1/slen$. Note that `elasticity_exponent` should be positive as an inverse variation is implicitly assumed. In very rare instances, changing the default value (e.g. to 2.0) may help avoid negative volumes.

`linear_solver = 'gmres'`

This governs which linear solver to use for solving the elasticity equations.

`'gmres'` Use GMRES to solve the elasticity equations.

`'point-multicolor'` Use the multicolor point solver to solve the elasticity equations. Without SPARSKIT, `linear_solver` is automatically reset to `'point-multicolor'`.

`ileft = 1`

Switch to use left or right preconditioning with GMRES.

`'0'` right preconditioning

`'1'` left preconditioning

`preconditioner_iters = 5`

Number of preconditioner iterations to perform. If not using GMRES, suggest increasing this value to 500 as a starting point.

`monitor_preconditioner = .false.`

Flag to monitor the residual of the preconditioner; this is principally a developers tool.

`untangling_iters = 0`

This is the number of untangling iterations to attempt if negative volumes are detected after deforming the grid. This procedure has a low likelihood of success if the negative volume element is a viscous boundary boundary layer. Only modifies nodes surrounded by tetrahedra. A value of 0 disables untangling.

`nsearch = 50`

Number of GMRES search directions. Memory requirements increase linearly with `nsearch`. Unused if the linear solver is not GMRES.

`nrestarts = 10`

Maximum number of restarts allowed when attempting to solve the system of equations to the specified tolerance. There is no memory penalty for increasing `nrestarts`. When using GMRES, the maximum number of search directions (iterations) performed to solve the system is `nsearch` $\times$ `nrestarts`. If not using GMRES, suggest increasing this value to 50 as a staring point, and the maximum number of iterations performed to solve the system is then `preconditioner_iters` $\times$ `nrestarts`.

`tol = 1.e-6`

Relative convergence tolerance used when solving the linear elasticity system. The linear system is considered converged when the residual $\leq$ `tol` $\times$ initial residual + `tol_abs`. The value of `tol` typically has the most direct influence on the convergence criterion.

`tol_abs = 1.e-14`

Absolute convergence tolerance used when solving the linear elasticity system. The linear system is considered converged when the residual $\leq$ `tol` $\times$ initial residual + `tol_abs`. There is generally little need to change the default value of `tol_abs`.

`residual_out_freq = nsearch`

Frequency at which the elasticity equation residual is output for convergence tracking. The first and final residuals are always output.

`restart_deformation = .true.`

When `.true.`, restart the solution of the elasticity equations for the current time step with the solution from the previous time step. This can result in significant CPU time saving for mesh deformation in time-accurate simulations. The downside is that the ability to *exactly* reproduce a time-periodic mesh may be compromised. For most practical applications this is likely not an issue.

B.4.19 &hiarms_actuator_disk

This namelist sets parameters needed for the HIARMS / SMEMRD actuator-disk model

```
&hiarms_actuator_disk
  hiarms_flag  = .false.
  nrotor_input = 1
/
```

`hiarms_flag = .false.`

When `.true.` this flag instructs FUN3D to call the HIARMS / SMEMRD library

`nrotor_input = 1`

This is the number of rotors that the HIARMS / SMEMRD library will model

B.4.20 &boundary_conditions

This namelist provides auxiliary information to the boundary conditions. Refer to section 3 for the definition of boundary numbers and other information.

```
&boundary_conditions
  farfield_point_vortex                = 0
  total_pressure_ratio(:)              = 1.0
  total_temperature_ratio(:)           = 1.0
  subsonic_inflow_velocity(:)          = 'normal'
  alpha_bc(:)                          = 0.0
  beta_bc(:)                           = 0.0
  theta1(:)                            = 0.0
  theta2(:)                            = 0.0
  theta3(:)                            = 0.0
  pt_amplitude(:)                      = 0.0
  pt_frequency(:)                      = 0.0
  pt_phase(:)                          = 0.0
  tt_amplitude(:)                      = 0.0
  tt_frequency(:)                      = 0.0
  tt_phase(:)                          = 0.0
  ampl(:)                              = 0.0
  freq(:)                              = 0.0
  phase(:)                             = 0.0
  random(:)                            = .false.
  ramp_constant(:)                     = 1.0
  start_time(:)                        = 0.0
  duration(:)                          = 0.0
  surge_amplitude(:)                   = 0.0
  pressure_relaxation(:)               = 1.0
  engine_reference_length              = 1.0
  engine_symmetry(:)                   = 1.0
  npr_set                              = 0.0
  static_pressure_ratio(:)             = 1.0
  mach_bc(:)                           = 0.0
  massflow(:)                          = 0.0
  grid_units                           = 'nondim'
  q_set(:,1:5)                         = 0.0
  q_set_ramp(:)                        = 0
  profile_type(:)                      = 'radial_polynomial'
  patch_center(:,1:3)                  = 0.0
  patch_scale(:)                       = 1.0
  profile_rho_coef(:,0:6)              = 0.0
  profile_u_coef(:,0:6)                = 0.0
  profile_v_coef(:,0:6)                = 0.0
  profile_w_coef(:,0:6)                = 0.0
```

```
profile_p_coef(:,0:6)                = 0.0
profile_vib_energy_coef(:,0:6)       = 0.0
profile_tdata_id(:)                  = -1
profile_coef(:,1:3)                  = 0.0
blayer_profile_power_law_exponent(:) = 0.1666667
blayer_thickness(:)                  = 1.0
karman_constant_kappa(:)             = 0.41
log_law_constant_c(:)                = 5.0
utau_inlet(:)                        = 0.0
vel_profile_file_name(:)             = ''
inlet_stochastic_fluctuations(:)     = .false.
fluctuations_type(:)                 = 'isotropic'
dns_data_file_name(:)                = ''
utau_dns_ref(:)                      = 0.01
u_rms_inlet(:)                       = 0.05
wave_no_ratio(:)                     = 5
l_scale(:)                           = 0.1
t_scale_factor(:)                    = 2.0
no_of_modes(:)                       = 150
wall_velocity(:,1:3)                 = 0.0
rotation_center(:,1:3)               = 0.0
rotation_vector(:,1:3)               = 0.0
rotation_rate(:)                     = 0.0
unorm_bc(:)                          = 0.0
wall_temperature(:)                  = 1.0
wall_temp_flag(:)                    = .false.
wall_radeq_flag(:)                   = .false.
wall_emissivity(:)                   = 0.8
wall_emissivity_b(:)                 = 0.
wall_emissivity_c(:)                 = 0.
wall_emissivity_d(:)                 = 0.
wall_temp_relax(:)                   = 0.001
wall_catalysis_model(:)              = 'super-catalytic'
catalytic_efficiency_o(:)            = 0.
catalytic_efficiency_n(:)            = 0.
ablation_option_map(:)               = 0
ablation_recession                   = .false.
ablation_recession_freq              = 3000
start_recession                      = 0
bprime_flag_map(:)                   = 1
compute_mdot_initial_map(:)          = 1
freq_mdot_map(:)                     = 5000
freq_wall_map(:)                     = 50
uncoupled_ablation_flag_map(:)       = 0
wall_blowing_model(:)                = 'none'
```

```
  virgin_density_wall(:)                = 1.
  char_density_wall(:)                  = 1.
  CHONSi_frac_char_map(:,1)             = 1.
  CHONSi_frac_pyrolysis_map(:,1)        = 1.
  h_ablation_map(:,:)                   = 0.
  mdot_pressure_map(:,:)                = 0.
  t_sublimation_map(:,:)                = 0.
  plenum_t0(:)                          = 1000.
  plenum_p0(:)                          = 1000.
  plenum_id(:)                          = 0
  fixed_in_id(:)                        = 0
  fixed_in_rho(:)                       = 0.
  fixed_in_uvw(:,1:3)                   = 0.
  fixed_in_t(:)                         = 0.
  fixed_in_tv(:)                        = 0.
  fixed_in_turb(:,1:7)                  = 0.
  specified_transition(:)               = .false.
  impose_pressure_gradient              = .false.
  pressure_gradient(:)                  = 0.0
  number_of_porous_boundaries           = 0
  porous_bc(:)                          = 0
  auxiliary_bc(:)                       = 'none'
  auxiliary_condition(:)                = 'no-model'
  x_constant_boundary(:)                = .false.
  y_constant_boundary(:)                = .false.
  z_constant_boundary(:)                = .false.
  tol_const_coord                       = 1.0e-6
  wall_function(:)                      = 'none'
/
```

`farfield_point_vortex = 0`

This controls the point vortex correction for 2D flows. Only applicable for 2D.

'0' does not apply the point vortex correction.

'1' applies the point vortex correction based on a under relaxed total lift.

'2' applies the point vortex correction based on a frozen total lift from previous total lift in the restart file.

`total_pressure_ratio(:) = 1.0`

This is the ratio of plenum total pressure to reference pressure used by 7011 boundary condition. Inflow Mach number must be less than one.

`total_temperature_ratio(:) = 1.0`

This is the ratio of plenum total temperature to reference temperature

used by 7011 boundary condition. Inflow Mach number must be less than one.

`subsonic_inflow_velocity(:) = 'normal'`

This sets the direction of the inflow velocity.

`'normal'` for inflow normal to each element face in the patch

`'alpha,beta'` the angle of the inflow is specified by `alpha_bc` and `beta_bc` as shown in Fig. 4.

`'interior'` the angle of the inflow is specified by the Euler angles `theta1`, `theta2`, and `theta3` as shown in Fig. B5.

`'offset'` the angle of normal inflow to the patch boundary is rotated by the Euler angles `theta1`, `theta2`, and `theta3` as shown in Fig. B5.

`'direct'` the angle of flow is set directly to vector components defined by `theta1`, `theta2`, and `theta3`. This can be used on an outflow boundary.

`'face_normal_outflow'` for outflow normal to each element face in the patch

`alpha_bc(:) = 0.0`

When `subsonic_inflow_velocity = 'alpha,beta'`, this is the angle of attack in radians for 7011 boundary condition inflow.

`beta_bc(:) = 0.0`

When `subsonic_inflow_velocity = 'alpha,beta'`, this is the angle of sideslip in radians for 7011 boundary condition inflow.

`theta1(:) = 0.0`

When `subsonic_inflow_velocity = 'interior'` or `'offset'`, this is the Euler angle θ in radians for 7011 boundary condition inflow. When `subsonic_inflow_velocity = 'direct'`, then θ directly specifies the components of a vector representing the flow direction.

`theta2(:) = 0.0`

When `subsonic_inflow_velocity = 'interior'` or `'offset'`, this is the Euler angle ϕ in radians for 7011 boundary condition inflow. When `subsonic_inflow_velocity = 'direct'`, then θ directly specifies the components of a vector representing the flow direction.

`theta3(:) = 0.0`

When `subsonic_inflow_velocity = 'interior'` or `'offset'`, this is the Euler angle ψ in radians for 7011 boundary condition inflow. When `subsonic_inflow_velocity = 'direct'`, then θ directly specifies the components of a vector representing the flow direction.

`pt_amplitude(:) = 0.0`

For use with the 7011 boundary condition, this sets the amplitude of pulsed total pressure. `ampl`*sin(`freq`*`simulation_time`+`phase`*pi/180).

`pt_frequency(:) = 0.0`

For use with the 7011 boundary condition, this sets the frequency of pulsed total pressure, see `ampl`.

`pt_phase(:) = 0.0`

For use with the 7011 boundary condition, this sets a phase shift (in degrees) of the inflow total pressure values, see `ampl`.

`tt_amplitude(:) = 0.0`

For use with the 7011 boundary condition, this sets the amplitude of pulsed total temperature conditions.

`tt_frequency(:) = 0.0`

For use with the 7103 boundary condition, this sets the frequency of pulsed total temperature, see `ampl`.

`tt_phase(:) = 0.0`

For use with the 7011 boundary condition, this sets a phase shift (in degrees) of the inflow total temperature, see `ampl`.

`ampl(:) = 0.0`

For use with the 7103 boundary condition, this sets the amplitude of pulsed inflow conditions. Only the velocity is varied using the equation $[u, v, w]$ = `ampl`*sin(`freq`*`simulation_time`+`phase`*pi/180).

`freq(:) = 0.0`

For use with the 7103 boundary condition, this sets the frequency of pulsed inflow velocity values, see `ampl`.

`phase(:) = 0.0`

For use with the 7103 boundary condition, this sets a phase shift (in degrees) of the inflow velocity values, see `ampl`.

`random(:) = .false.`

For use with the 7103 boundary condition, this creates random fluctuations in in the magnitude of the supersonic inflow conditions in the range [0,`ampl`] when `.true.`.

`ramp_constant(:) = 1.0`

For use with 7104 boundary condition, this ramps the velocity magnitude of supersonic inflow conditions with the exponential expression, $(1 - \exp(-\texttt{simulation_time}/\texttt{ramp_constant}))$.

`start_time(:) = 0.0`

For use with the 5060 boundary condition, this is the start time, in terms of Fun3D `simulation_time`, of a delta function change to the subsonic outflow static pressure ratio.

`duration(:) = 0.0`

For use with the 5060 boundary condition, this sets the duration of the delta function change in units of Fun3D time, see `simulation_time`.

`surge_amplitude(:) = 0.0`

For use with the 5060 boundary condition, this sets the transient increase in the value of the outflow static pressure ratio as a percentage of the base line value. For example, a 2 percent transient applied to block 5 is input as `surge_amplitude(5) = 2.0`.

`pressure_relaxation(:) = 1.0`

For use with the 5051 boundary condition, this weights the user specified back pressure with the solution pressure. `p_applied` = `pressure_relaxation` * `static_pressure_ratio` + (1 - `pressure_relaxation`) * `pressure_internal`

`engine_reference_length = 1.0`

Use this factor to scale the non-dimensional time in the engine simulation package.

`engine_symmetry(:) = 1.0`

Use this factor to scale the area and massflow of an engine. This factor is used in the physical engine modeling routines, so that the actual massflow numbers can be tracked properly. For example, set to 2.0 for an inlet face on a symmetry plane or set to 360.0 for a one-degree axisymmetric wedge.

`npr_set = 0.0`

This sets the nozzle pressure ratio for nozzle component performance.

`static_pressure_ratio(:) = 1.0`

This is the ratio of specified boundary static pressure to reference pressure used by the 7012 and 5051 boundary conditions. Outflow Mach number must be less than one.

`mach_bc(:) = 0.0`

This is Mach number on boundary face used by 5052 and 7031 boundary conditions. Outflow Mach number must be less than one.

`massflow(:) = 0.0`

This is massflow through boundary face in units of grid unit squared used by 7031 and 7036 boundary conditions. It is nondimensionalized according to $(\rho_\infty a_\infty)$ for `eqn_type = 'compressible'`.

`grid_units = 'nondim'`

This converts a user specified dimensional massflow to units of mesh unit squared. If massflow is input in units of mesh units squared, `grid_units` is not required.

`'nondim'` for nondimensional input.

`'m'` for meters.

`'cm'` for centimeters.

`'mm'` for millimeters.

`'feet'` for feet.

`'inches'` for inches.

`q_set(:,1:5) = 0.0`

This sets the primitive variables on boundary face used by boundary conditions 7100 and 7105.

`q_set_ramp(:) = 0`

When this is greater than zero, primitive variables on boundary face are ramped from zero to `q_set` over these iterations, for boundary conditions 7100 and 7105.

`profile_type(:) = 'radial_polynomial'`

This switches between inflow profiles,

`'radial_polynomial'` defines a radial polynomial about `patch_center` of size `patch_scale` with `profile_rho_coef`, `profile_u_coef`, `profile_v_coef`, `profile_w_coef`, `profile_p_coef`. `profile_vib_energy_coef` and `profile_tdata_id` are also needed if `eqn_type = 'generic'`

`'z_polynomial'` defines a z polynomial about `patch_center` of size `patch_scale` with `profile_rho_coef`, `profile_u_coef`, and `profile_p_coef`.

`'power_law'` defines a power-law velocity profile function with `profile_coef`.

`'boundary_layer_profile_power_law'` defines a boundary layer with a power-law velocity profile with `blayer_profile_power_law_exponent` and `blayer_thickness`.

'data_file' defines a boundary layer with a profile from a given data file

patch_center(:,1:3) = 0.0

This is the center of a 7101 bc.

patch_scale(:) = 1.0

This scales the radius of a 7101 bc.

profile_rho_coef(:,0:6) = 0.0

This is the radius polynomial coefficients of density for 7101 bc.

profile_u_coef(:,0:6) = 0.0

This is the radius polynomial coefficients of u for 7101 bc.

profile_v_coef(:,0:6) = 0.0

This is the radius polynomial coefficients of v for 7101 bc.

profile_w_coef(:,0:6) = 0.0

This is the radius polynomial coefficients of w for 7101 bc.

profile_p_coef(:,0:6) = 0.0

This is the radius polynomial coefficients of pressure for 7101 bc.

profile_vib_energy_coef(:,0:6) = 0.0

This is the radius polynomial coefficients of vibration energy for 7101 bc. Only for eqn_type = 'generic'.

profile_tdata_id(:) = -1

This is the species grouping in the tdata file for 7101 bc. Only for eqn_type = 'generic'.

profile_coef(:,1:3) = 0.0

These three coefficients are wind speed reference, reference height, and power law exponent,
profile_coef(:,1)*(z/profile_coef(:,2))**profile_coef(:,3).

blayer_profile_power_law_exponent(:) = 0.1666667

This is the exponent for power-law boundary layer profile. Use with profile_type = 'boundary_layer_profile_power_law'.

blayer_thickness(:) = 1.0

This is the thickness of the boundary layer in grid units. It is used by profile_type = 'boundary_layer_profile_power_law' and profile_type = 'boundary_layer_profile_log_law'.

`karman_constant_kappa(:) = 0.41`

This is the Kármán constant in a log-law boundary layer profile. Use with `profile_type = 'boundary_layer_profile_log_law'`.

`log_law_constant_c(:) = 5.0`

This is the constant C in a log-law boundary layer profile. Use with `profile_type = 'boundary_layer_profile_log_law'`.

`utau_inlet(:) = 0.0`

This is the frictional velocity for log-law boundary layer profile. Use with `profile_type(:) = 'boundary_layer_profile_log_law'`.

`vel_profile_file_name(:) = ''`

This is the data file containing mean velocity profile data (e.g. from DNS data), which can be applied at the inflow boundary. The ASCII file has a one-line header and then two columns of distance from the wall normalized by boundary layer thickness and mean velocity normalized by freestream speed of sound.

`inlet_stochastic_fluctuations(:) = .false.`

This is used to activate inflow stochastic turbulent fluctuations for BC 7101 when set to .true.

`fluctuations_type(:) = 'isotropic'`

This is the type of stochastic fluctuations to be generated at the inflow. They can be 'anisotropic' or 'isotropic'.

`dns_data_file_name(:) = ''`

This is the data file containing shear stress data (e.g., from DNS data). It is used to generate anisotropic fluctuations at the inlet. The ASCII file has a one-line header and then nine columns. The columns are wall distance, y^+, uu, vv, ww, uv, uw, vw, and ϵ.

`utau_dns_ref(:) = 0.01`

This is the frictional velocity used to scale the DNS data. It is used only for generating anisotropic fluctuations.

`u_rms_inlet(:) = 0.05`

This is the RMS value of the maximum amplitude of the turbulent fluctuations. It is used only for generating isotropic fluctuations.

`wave_no_ratio(:) = 5`

This is the ratio between the largest and smallest wave numbers. It is used only for generating isotropic fluctuations.

`l_scale(:) = 0.1`

This is the integral length scale of the fluctuations, which is usually about 10% of the boundary layer thickness. It is used for generating both isotropic and anisotropic fluctuations.

`t_scale_factor(:) = 2.0`

This is the scaling factor for the turbulent time scale of the turbulent fluctuations, `turbulent_timescale=(0.05*blayer_thickness/u_rms_inlet) /t_scale_factor`. It is used only for generating isotropic fluctuations.

`no_of_modes(:) = 150`

This is the number of modes used to generate the turbulent spectrum of the inlet fluctuations.

`wall_velocity(:,1:3) = 0.0`

This is the 4000 solid wall specified translational velocity. It should be tangent to the boundary to ensure a well-posed problem.

`rotation_center(:,1:3) = 0.0`

This is the 4000 solid wall specified rotational velocity center point, see `rotation_vector` and `rotation_rate`.

`rotation_vector(:,1:3) = 0.0`

This is the 4000 solid wall specified rotational vector, see `rotation_center` and `rotation_rate`. Should be unit length.

`rotation_rate(:) = 0.0`

This is the 4000 solid wall specified rotational rate in reference speed of sound per grid unit (`eqn_type = 'compressible'`) or reference speed per grid unit (`eqn_type = 'incompressible'`) ($\omega = \omega^* \frac{L^*_{ref}}{a^*_{ref} L_{ref}}$ or $\omega = \omega^* \frac{L^*_{ref}}{V^*_{ref} L_{ref}}$), see `rotation_center`, `rotation_vector`, and section 2.

`unorm_bc(:) = 0.0`

This is the specified velocity in the boundary normal direction, for 4000 solid walls.

`wall_temperature(:) = 1.0`

This is the ratio of wall temperature to reference temperature for `eqn_type = 'compressible'` or the wall temperature in degrees Kelvin for `eqn_type = 'generic'`. If set to `-1`, then the wall temperature is computed so that there is zero heat flux, i.e., adiabatic. The `wall_temp_flag` must be set to `.true.` for this boundary condition to take effect. Note: for `eqn_type = 'generic'` the wall temperature must be explicitly set as `>1` or `-1`.

`wall_temp_flag(:) = .false.`

This must be `.true.` when specifying the wall temperature via the namelist variable `wall_temperature`. The default `.false.` sets $\frac{T_{\text{wall}}}{T_{\text{ref}}} = 1 + \frac{\sqrt{P_r}(\gamma-1)M^2}{2}$ for `eqn_type = 'compressible'`, see Anderson and Bonhaus [2].

`wall_radeq_flag(:) = .false.`

Compute the wall temperature via the Stefan-Boltzmann Law. The radiative equilibrium wall temperature is computed from the heating rate q_{wall} using $q_{wall} = \epsilon\sigma T_{radeq}^4$ where the surface emissivity ϵ is entered as `wall_emissivity` and σ is the Stefan-Boltzmann constant.

`wall_emissivity(:) = 0.8`

This is ϵ_0, where emissivity is specified as a function of wall temperature with the expression $\epsilon = \epsilon_0 + T(\epsilon_b + T(\epsilon_c + T\epsilon_d))$. The other coefficients are entered via the following three variables.

`wall_emissivity_b(:) = 0.`

This is ϵ_b in the above equation.

`wall_emissivity_c(:) = 0.`

This is ϵ_c in the above equation.

`wall_emissivity_d(:) = 0.`

This is ϵ_d in the above equation.

`wall_temp_relax(:) = 0.001`

This is the relaxation factor η used for `wall_radeq_flag` wall temperature boundary condition. The wall temperature is updated as $T^{new} = T^{old} + \eta * (T_{radeq} - T^{old})$

`wall_catalysis_model(:) = 'super-catalytic'`

This defines the catalytic efficiency of the wall to promote recombination of atoms to molecules. Allowable options are:

`'super-catalytic'` Forces the mass fraction of species at the wall to equal the mass fractions specified for the free stream in the `tdata` file.

`'fully-catalytic'` Specifies a catalytic efficiency of 1 thereby forcing homogeneous recombination of atoms diffusing to the wall.

`'non-catalytic'` Specifies a zero mole fraction gradient at the wall - signifying zero catalytic efficiency.

`'equilibrium-catalytic'` Computes the equilibrium chemical composition of species at the wall temperature and pressure.

`'constant-catalytic'` Catalytic efficiency is user specified constants

`'Stewart-RCG'` Reaction cured glass from Stewart

`'Zoby-RCG'` Reaction cured glass from Zoby

`'Scott-RCG'` Reaction cured glass from Scott

`'CSiC'` Experimental CSiC from JSC for X-38

`'RCC-LVP'` Stewart NASA TM 112206

`'CCAT-ACC'` Shuttle RCC from Stewart NASA TM 112206

`'CSiC-SNECMA'` Derived from Stewart RCC

`catalytic_efficiency_o(:) = 0.`

This is the fraction of diffusion flux of atomic oxygen striking wall that is converted to molecular oxygen, when `wall_catalysis_model = 'constant-catalytic'`.

`catalytic_efficiency_n(:) = 0.`

This is the fraction of diffusion flux of atomic nitrogen striking wall that is converted to molecular nitrogen, when `wall_catalysis_model = 'constant-catalytic'`.

`ablation_option_map(:) = 0`

This is an integer that specifies whether the pyrolysis ablation rate and wall temperature are computed in addition to the char ablation rate. This option only affects cases with `bprime_flag_map` equal to 0 or 1.

`'0'` The pyrolysis ablation rate and wall temperature are computed, in addition to the char ablation rate, assuming steady-state ablation.

`'1'` The pyrolysis ablation rate and wall temperature are held constant (they are set to the values present in `ablation_from_laura.m`) while the char ablation rate is computed.

`ablation_recession = .false.`

This flags triggers the surface deformation and mesh movement through aeroelastic deformation. Note: this flags only applies to the internal Fun3D coupled-ablation mechanism and is not applicable to Fun3d-CHAR coupled ablation. Default: .false.

`ablation_recession_freq = 3000`

It is an integer that specifies the frequency of surface recession update. This flags only works with `ablation_recession = .true.`. Default: 3000

`start_recession = 0`

It is an integer that specifies when to start applying recession for surface deformation. Default: 0

`bprime_flag_map(:) = 1`

This is an integer defining if the b-prime approach is applied. Applicable only for blowing model `equil_char_quasi_steady = 0`.

`'0'` Do not use bprime approach, and instead use a rigorous diffusion model. This option is consistent with the "Fully-Coupled" approach defined in Ref. [2].

`'1'` Use b-prime approach. This option is consistent with the "Partially-Coupled" approach defined in Ref. [2].

`'2'` Hold the ablation rate and wall temperature constant from the restart file, while applying the rigorous diffusion model (thus, the surface energy balance and char equilibrium constraint are not satisfied). This option is sometimes useful when transitioning from a bprime flag = 1 computation to a bprime flag = 0 computation.

`compute_mdot_initial_map(:) = 1`

This is an integer defining if the ablation rates are computed before the first flowfield iteration.

`'0'` Applies the ablation rates and wall temperatures present in the `ablation_from_laura.m` file.

`'1'` Computes the ablation rates and wall temperatures before the first flowfield iteration.

`freq_mdot_map(:) = 5000`

For `bprime_flag_map = 1`, this is an integer defining frequency of updating ablation rates and wall temperature.

`freq_wall_map(:) = 50`

For `bprime_flag = 1`, this is an integer defining frequency of update to ablation wall boundary conditions. For `bprime_flag = 0`, an integer defining frequency of update to the surface energy balance solution, which defines the wall temperature.

`uncoupled_ablation_flag_map(:) = 0`

This is an integer defining if an uncoupled ablation analysis is applied. The uncoupled ablation option is included to provide a baseline solution for the coupled ablation analysis.

`'0'` Do not apply an uncoupled ablation analysis.

'1' Apply an uncoupled ablation analysis to a converged non-ablating flowfield.

wall_blowing_model(:) = 'none'

This is the blowing or ablation model.

'none' No wall blowing

'specified' blowing rate is user specified function of pressure (see also mdot_press)

'porous_chamber' Special options for simulation of buoyancy driven flow in pressurized rig for BNNT production

'quasi_steady' Compute ablation rate as function of surface energy balance and equilibrium catalytic bc

'equil_char_quasi_steady' Include equilibrium char approximation

'FIAT' Couple to material response code FIAT (not active)

virgin_density_wall(:) = 1.

This is the density (kg/m^3) of thermal protection system ablator in virgin state (prior to heating level sufficient to cause any reactions).

char_density_wall(:) = 1.

This is the density (kg/m^3) of remaining char in ablator after binding resins have pyrolized.

CHONSi_frac_char_map(:,1) = 1.

See definition below for CHONSi_frac_pyrolysis_map

CHONSi_frac_pyrolysis_map(:,1) = 1.

These arrays set elemental mass fraction (second index) of C, H, O, N, Si, Fe, Mg, Na, B species for char and pyrolysis gas. The fractions in each array should sum to 1.

h_ablation_map(:,:) = 0.

This is a vector of extent 3 used to compute the heat of ablation in MJ/kg for quasi steady blowing option as h_ablation_0(1) + (h_ablation_0(2)) log pw + (h_ablation_0(3))(log pw)**2 where pw is the local pressure, in atmospheres.

mdot_pressure_map(:,:) = 0.

This is a vector of extent 2 is used to set the blowing or suction distribution defined as mdot_pressure_0(1) + (mdot_pressure_0(2))*p/

(rho_inf*V_inf**2) where p is the local pressure, rho_inf is the reference density, and V_inf is the reference velocity. Positive value produces blowing distribution, while negative value produces suction distribution.

t_sublimation_map(:,:) = 0.

This is a vector of extent 3 used to compute the sublimation temperature in degrees Kelvin for quasi steady blowing option as t_sublimation_0(1) + (t_sublimation_0(2)) log pw + (t_sublimation_0(3))(log pw) **2 where pw is the local pressure, in atmospheres.

plenum_t0(:) = 1000.

For use with the 7021 boundary condition, this is the total plenum temperature in Kelvin.

plenum_p0(:) = 1000.

For use with the 7021 boundary condition, The total plenum pressure in N/m^2 (Pascals) feeding this boundary.

plenum_id(:) = 0

For use with the 7021 boundary condition (one or more rcs_jet plenum bcs), the jet plenum contains this species set from the file tdata. For example, if an RCS jet is firing H_2 and O_2 into an air stream, the tdata file may look like:

```
One Temperature
N
O
N2 0.76
O2 0.24
NO

H2 0.5
O2 0.5
OH
H
O
```

In this case, if the boundary to the plenum is surface number 5 then plenum_id(5)=2, the second grouping of species in the tdata file. The numbers following the species name define the mass fraction of that species at the inflow boundary. The sum of the mass fraction in each group must equal one. Species groups are separated by blank lines and multiple RCS jets may be defined in this manner.

`fixed_in_id(:) = 0`

For use with the 70XX boundary condition (one or more supersonic inflow bcs) the supersonic inflow boundary condition contains the species set in the same way as the `plenum_id` for the `rcs_jet` plenum boundary condition described above.

`fixed_in_rho(:) = 0.`

For use with the 70XX boundary condition (one or more supersonic inflow bcs) the dimensional inflow mixture density in kg/m^3.

`fixed_in_uvw(:,1:3) = 0.`

For use with the 70XX boundary condition (one or more supersonic inflow bcs) the dimensional inflow Cartesian velocity components in m/sec.

`fixed_in_t(:) = 0.`

For use with the 70XX boundary condition (one or more supersonic inflow bcs) the dimensional inflow translational rotational temperature in Kelvin.

`fixed_in_tv(:) = 0.`

For use with the 70XX boundary condition (one or more supersonic inflow bcs) the dimensional inflow vibrational-electronic temperature in Kelvin.

`fixed_in_turb(:,1:7) = 0.`

For use with the 70XX boundary condition (one or more supersonic inflow bcs) This is for the turbulence models for a one-equation model this is the ratio of the inflow eddy viscosity to the inflow molecular viscosity, for a two-equation model this is: the inflow turbulence intensity and the ratio of the inflow eddy viscosity to the inflow molecular viscosity Full Reynolds stress models are not currently supported.

`specified_transition(:) = .false.`

When `.true.`, a turbulent transition point will be imposed on the solution.

`impose_pressure_gradient = .false.`

When `.true.`, a global pressure gradient in the direction of `pressure_gradient` will be imposed as a source term to the residual.

`pressure_gradient(:) = 0.0`

The nondimensional pressure gradient in Cartesian coordinates, imposed when `impose_pressure_gradient = .true.`.

`number_of_porous_boundaries = 0`

This is the number of `porous_bc` entries.

`porous_bc(:) = 0`

This is the boundary index of each porous boundary face. The default of 0 is not a valid boundary index and must be set.

`auxiliary_bc(:) = 'none'`

This is the name of the auxiliary source-term based boundary condition function.

`'fixed'` imposes a fixed, normal velocity directed out of the computational domain, for this porous boundary.

`'none'` does not apply a function to this source-term based boundary condition.

`auxiliary_condition(:) = 'no-model'`

This sets a source-term based auxiliary condition that will be applied over a `viscous_solid` boundary. For example, a fixed, normal velocity directed out of the computational domain can be specified for one porous boundary, `5`, with

```
number_of_porous_boundaries = 1
porous_bc(1)                 = 5
auxiliary_condition(5)      = 'unorm'
auxiliary_bc(5)             = 'fixed'
unorm_bc(5)                 = 0.02
```

`'no-model'` does not apply a model.

`'unorm'` imposes a fixed, normal velocity directed out of the computational domain, for this porous boundary.

`x_constant_boundary(:) = .false.`

This specifies that a boundary is an x constant face for mesh movement, constraining motion the to be tangent to face. Set automatically for x-symmetry boundaries.

`y_constant_boundary(:) = .false.`

This specifies that a boundary is an y constant face for mesh movement, constraining motion the to be tangent to face. Set automatically for y-symmetry boundaries.

`z_constant_boundary(:) = .false.`

This specifies that a boundary is an z constant face for mesh movement, constraining motion the to be tangent to face. Set automatically for z-symmetry boundaries.

`tol_const_coord = 1.0e-6`

This is the tolerance for verifying that a boundary surface is a planar boundary for mesh movement by restricting the minimum and maximum value in the "constant" direction.

`wall_function(:) = 'none'`

This is the name of the wall function model.

`'none'` integrates to the the wall (no wall function).

`'dlr'` utilizes the wall function of Knopp, Alrutz, and Schwamborn. [59] Can be used with `turbulence_model = 'sa'`, `turbulence_model = 'sst'`, or their variations.

B.4.21 &periodicity

This namelist contains variables that specify inputs relevant to periodic boundary conditions.

```
&periodicity
  periodic_dir(1:3) = 0
  periodic_tol      = 1.e-10
/
```

`periodic_dir(1:3) = 0`

This integer array specifies the Cartesian coordinate direction associated with each periodic boundary face pair in the simulation. The `periodic_dir(1)` entry is for faces marked with the 6100 boundary condition. The `periodic_dir(2)` entry is for 6101 and `periodic_dir(3)` is for 6102. For example, if a single pair of boundaries have periodicity, they should be given the 6100 boundary condition and `periodic_dir(1)` should reflect the desired Cartesian direction of periodicity.

'`0`' when this periodic boundary pair is not used.

'`1`' when this periodic boundary pair is normal to the x-Cartesian direction.

'`2`' when this periodic boundary pair is normal to the y-Cartesian direction.

'`3`' when this periodic boundary pair is normal to the z-Cartesian direction.

`periodic_tol = 1.e-10`

Tolerance on determining coincident points on periodic boundary pairs.

B.4.22 &two_d_trans

This namelist is used to specify a 2D transition location. If the airfoil is split into upper and lower patches, the transition location can be specified independently on each patch. If there is only a single patch, it can be split with a z value to designate the upper and lower airfoil surfaces. This transition specification is limited to specifying transition on a single-element configuration such as an airfoil or a flat plate. Only a single transition location is supported for multi-element airfoils. Transition is modeled by turning off the turbulent production terms in "laminar" regions of the grid. This option is only valid for the perfect gas SA turbulence model. This is the same approach taken in CFL3D and NSU3D.FUN3D results from this approach for a DLR-F6 transonic cruise condition are shown in Lee-Rausch et al. [60]

```
&two_d_trans
  turb_transition  = .false.
  use_2d_values    = .false.
  upper_patch      = 1
  lower_patch      = 1
  use_z_value      = .false.
  z_location       = 0.0
  upper_x_location = 0.0
  lower_x_location = 0.0
/
```

turb_transition = .false.

This must be `.true.` to specify laminar regions of flow during a turbulent flow simulation.

use_2d_values = .false.

This enables 2D transition specification.

upper_patch = 1

This is the upper patch with specified transition.

lower_patch = 1

This is the lower patch with specified transition.

use_z_value = .false.

This allows a single patch to be split into upper and lower surfaces of an airfoil by a z plane.

z_location = 0.0

This is the z location to split the airfoil if `use_z_value = .true`.

`upper_x_location = 0.0`

This is the upper surface x transition location.

`lower_x_location = 0.0`

This is the lower surface x transition location.

B.4.23 &three_d_trans

This namelist is used to specify 3D boundary layer transition locations. The command line option `--turb_transition` is required to activate. If you run the flow solver without the `--turb_transition`, it will default to fully turbulent even though you have the laminar boundaries defined. Transition is modeled by the turning off the turbulent production terms in "laminar" regions of the grid. This option is only valid for the perfect gas SA turbulence model. This is the same approach taken in CFL3D and NSU3D.FUN3D results from this approach for a DLR-F6 transonic cruise condition are shown in Lee-Rausch et al. [60]

```
&three_d_trans
  use_3d_values               = .false.
  n_transition_group          = 1
  transition_group_patches(:) = '1'
  transition_x1(:)            = 0.0
  transition_y1(:)            = 0.0
  transition_x2(:)            = 0.0
  transition_y2(:)            = 1.0
/
```

`use_3d_values = .false.`

This turns 3D transition specification on.

`n_transition_group = 1`

This is the number of patch groups, limited to 100.

`transition_group_patches(:) = '1'`

This is the patch indexes for each group. Commas and dashes can be used to specify ranges, i.e., `'1,2,5-7'`.

`transition_x1(:) = 0.0`

This is the x value for determining the start of the transition line.

`transition_y1(:) = 0.0`

This is the y value for determining the start of the transition line.

`transition_x2(:) = 0.0`

This is the x value for determining the end of the transition line.

`transition_y2(:) = 1.0`

This is the y value for determining the end of the transition line.

B.4.24 &flow_initialization

This namelist allows the user to initialize regions of the meanflow solution with quantities other than freestream. A maximum of 100 volumes can be defined. The volumes may overlap each other as well as domain boundaries. In the event that a grid point is contained in more than one volume, a subsequent volume in this file will supersede the volumes listed before it. Boundary conditions supersede the flow initialization.

```
&flow_initialization
  number_of_volumes  = 0
  type_of_volume(:)  = 'none'
  center(1:3,:)      = 0.0
  radius(:)          = 0.0
  point1(1:3,:)      = 0.0
  point2(1:3,:)      = 0.0
  radius1(:)         = 0.0
  radius2(:)         = 0.0
  rho(:)             = 1.0
  c(:)               = 1.0
  u(:)               = 0.0
  v(:)               = 0.0
  w(:)               = 0.0
  mass_fraction(:,:) = 1.e-20
  temperature(:,:)   = 1000.
/
```

`number_of_volumes = 0`

This is the number of initialization volumes.

`type_of_volume(:) = 'none'`

This is the type of initialization volume.

`'box'` for a box. The diagonal corners are specified by `point1` and `point2`.

`'sphere'` for a sphere. The position and size is specified by `center` and `radius`.

`'cylinder'` for a cylinder with size `radius`. The center axis is defined between `point1` and `point2`.

`'cone'` for a cone or frustum. The center axis is defined between `point1` and `point2`. Two radii are required, `radius1` at `point1` and `radius2` at `point2`. A frustum is specified with two nonzero radii.

`center(1:3,:) = 0.0`

This is the center of the `'sphere'` volume type.

`radius(:) = 0.0`

This is the radius of the `'sphere'` and `'cylinder'` volume types.

`point1(1:3,:) = 0.0`

This is one end of the `'cone'` or `'cylinder'` volume types or one corner of a `'box'` volume type.

`point2(1:3,:) = 0.0`

This is the other end of the `'cone'` or `'cylinder'` volume types or the opposite corner of a `'box'` volume type.

`radius1(:) = 0.0`

This is the radius at `point1` of `'cone'` volume type.

`radius2(:) = 0.0`

This is the radius at `point2` of `'cone'` volume type.

`rho(:) = 1.0`

This is the nondimensional density in the volume.

`c(:) = 1.0`

This is the nondimensional speed of sound in the volume.

`u(:) = 0.0`

This is the nondimensional x-component of velocity in the volume.

`v(:) = 0.0`

This is the nondimensional y-component of velocity in the volume.

`w(:) = 0.0`

This is the nondimensional z-component of velocity in the volume.

`mass_fraction(:,:) = 1.e-20`

This is the species mass fraction array in the volume. The maximum number of species (first index) is hardwired to 50 in this namelist. The second index is the volume index. All mass fractions are initialized to trace values (1.e-20) so it is only necessary to define non-trace species. This option only applies to `eqn_type='generic'`.

`temperature(:,:) = 1000.`

This is the translational-rotational and vibrational electronic temperature array in the volume, in units of Kelvin. First index is 1 for the translational-rotational temperature and 2 for the vibrational-electronic

temperature. The second index is the volume index. This option only applies to `eqn_type='generic'`.

B.4.25 &component_parameters

This namelist provides expanded ability to track forces, moments, and mass-flows according to user-specified groups of boundary patches that define a "component." See `component_name` for a description of the output file names. The `grid_units` in `&boundary_conditions` are used to calculate dimensional quantities.

```
&component_parameters
  number_of_components           = 0
  component_name(:)              = ''
  component_type(:)              = 'boundary'
  component_force_direction(1,:) = 1.0
  component_count(:)             = -1
  component_input(:)             = ''
  list_forces                    = .false.
  component_symmetry(:)          = 1.0
  area_reference_ct              = 1.0
  component_xmc(:)               = x_moment_center
  component_ymc(:)               = y_moment_center
  component_zmc(:)               = z_moment_center
  component_cref(:)              = x_moment_length
  component_bref(:)              = y_moment_length
  component_sref(:)              = reference_area
  component_hinge_sweep(:)       = 0.0
  component_hinge_dihedral(:)    = 0.0
  calculate_cd(:)                = .false.
  calculate_thrust_ratio(:)      = .false.
  massflow_component(:)          = 0
  throat_area(:)                 = 0.0
  npr(:)                         = 0.0
  ntr(:)                         = 0.0
  allow_flow_through_forces      = .false.
  calculate_arp1420_distortion   = .false.
  inlet_distortion_boundary(:)   = 0
  number_of_rakes(:)             = 0
  rake_clock_angle(:)            = 0.0
  number_of_rings(:)             = 0
  rake_points(:,1:3,:,:)         = 0.0
  circle_center(1:3,:)           = 0.0
  circle_normal(1:3,:)           = 0.0
  circle_radius(:)               = 0.0
  corner1(1:3,:)                 = 0.0
  corner2(1:3,:)                 = 0.0
  corner3(1:3,:)                 = 0.0
  corner4(1:3,:)                 = 0.0
```

```
  box_lower_corner(1:3,:)        = 0.0
  box_upper_corner(1:3,:)        = 0.0
  sphere_center(1:3,:)           = 0.0
  sphere_radius(:)               = 0.0
/
```

number_of_components = 0

This is the number of components (groups of boundary patches) to track.

component_name(:) = ''

This is the component output filename, [project_rootname]_fm_[component_name].dat. Files will be overwritten if this name is not set.

component_type(:) = 'boundary'

The default is 'boundary'. The user can define sample surfaces for creating off-body control volumes.The current choices for sampling area 'circle', 'quad', and 'box'. The default value is 'boundary'

component_force_direction(1,:) = 1.0

This is a vector that determines the direction of the summary forces listed in the '[project_name]_stream_info.dat' file. The default is to list the resultant forces in the 'x' Cartesian direction, i.e. 'component_force_direction(1:3,:) = (/1.0_dp,0.0_dp,0.0_dp/)'.

component_count(:) = -1

This is the number of boundary patches assigned to a component. If -1 is given, this number is computed implicitly from component_input.

component_input(:) = ''

This is the list of boundary patches to assigned to a component. Boundary indexes are separated with commas and dashes can be used to specify ranges, i.e., '1,2,5-7'.

list_forces = .false.

Write flow quantities for each component to a file named [project_rootname]_stream_info.dat.

component_symmetry(:) = 1.0

The factor to multiply existing mesh surface by to obtain the complete area. For example, if only 1/4 revolution of an axisymmetric nozzle is modeled, component_symmetry(ib) should be set to 4.0.

area_reference_ct = 1.0

Alternate reference area for calculating a thrust coefficient instead of thrust ratio.

`component_xmc(:) = x_moment_center`

This is x-coordinate of the moment center assigned to a component. The default value comes from the `&force_moment_integ_properties` force and moment namelist.

`component_ymc(:) = y_moment_center`

This is y-coordinate of the moment center assigned to a component. The default value comes from the `&force_moment_integ_properties` force and moment namelist.

`component_zmc(:) = z_moment_center`

This is z-coordinate of the moment center assigned to a component. The default value comes from the `&force_moment_integ_properties` force and moment namelist.

`component_cref(:) = x_moment_length`

This is the x-direction reference length assigned to a component used to non-dimensionalize moments about y (pitching moment). The default value comes from the `&force_moment_integ_properties` force and moment namelist.

`component_bref(:) = y_moment_length`

This is the y-direction reference length assigned to a component used to non-dimensionalize moments about x (rolling moment) and z (yawing moment). The default value comes from the force and moment namelist, `&force_moment_integ_properties`.

`component_sref(:) = reference_area`

This is the reference area assigned to a component used to non-dimensionalize forces and moments. The default value comes from the force and moment namelist, `&force_moment_integ_properties`.

`component_hinge_sweep(:) = 0.0`

This is the hinge sweep angle in degrees assigned to a component used to non-dimensionalize moments about y (pitching moment). The default value is zero.

`component_hinge_dihedral(:) = 0.0`

This is the hinge dihedral angle in degrees assigned to a component used to non-dimensionalize moments about x (rolling moment). The default value is zero.

`calculate_cd(:) = .false.`

This will request an ideal mass flow calculation for component n.

`calculate_thrust_ratio(:) = .false.`

This will request a thrust ratio calculation for component n.

`massflow_component(:) = 0`

Specifies what component to get the physical mass flow from to calculate the ideal thrust. This is typically the component assigned to the nozzle

`throat_area(:) = 0.0`

This is the throat area associated with this component. It should only include that area that is represented in the computational domain (i.e., not both halves of a symmetric domain). It can be computed with `&sampling_parameters` via the `type_of_geometry(:) = 'circle'` and `type_of_data(1) = 'integrated'`.

`npr(:) = 0.0`

This is the nozzle pressure ratio associated with the component. Typically, it has the same value as the variable `total_pressure_ratio` in the `&boundary_conditions` namelist.

`ntr(:) = 0.0`

This is the nozzle temperature ratio associated with the component. Typically, it has the same value as the variable `total_temperature_ratio` in the `&boundary_conditions` namelist.

`allow_flow_through_forces = .false.`

Pressure drag and skin friction forces are by default calculated only on boundary faces designated as solid surfaces (viscous or inviscid). To include the pressure and momentum flux forces due to nozzles or inlets `allow_flow_through_forces` should be set to `.true.`. The flow-through faces to be tracked should be listed in the `component_count` and `component_input` lists accordingly.

`calculate_arp1420_distortion = .false.`

Setting this to try will activate the calculation of the the SAE inlet distortion standard 1420 on on the boundary set by `inlet_distortion_boundary(:)`. The default setting for `calculate_arp1420_distortion` is `.false.`. This option requires the specification of rake points on the boundary defining the inlet face.

The required input using this option are `inlet_distortion_boundary` `number_of_rakes` `number_of_rings` `rake_clock_angle` and `rake_points`.

`inlet_distortion_boundary(:) = 0`

Defines the Fun3D boundary index to use for the SAE 1420 distortion analysis.

`number_of_rakes(:) = 0`

Defines the number of "spokes" of the distortion rake, moving radially out from the hub to the outer edge of the inlet face, Used when `calculate_arp1420_distortion = .true.`. The current maximum number of rakes is 36.

`rake_clock_angle(:) = 0.0`

Defines the angle of the rake array. Used when `calculate_arp1420_distortion = .true.`. The default clock angle is 0.

`number_of_rings(:) = 0`

Defines the number of points on each spoke of the distortion rake. Used when `calculate_arp1420_distortion = .true.`. It is assumed each rake has the same number of points. The current maximum number of rings is 36.

`rake_points(:,1:3,:,:) = 0.0`

Defines the `(x,y,z)` position of each rake probe. Required when `calculate_arp1420_distort = .true.`. For example, `rake_points(2,1:3,1,3) = x,y,z` is the position of the first point on the third (radial) rake for the second inlet distortion calculation.

`circle_center(1:3,:) = 0.0`

Defines the `(x,y,z)` position of a control volume circle.

`circle_normal(1:3,:) = 0.0`

Defines the `(nx,ny,nz)` direction of a control volume circle.

`circle_radius(:) = 0.0`

Defines the radius of a control volume circle.

`corner1(1:3,:) = 0.0`

This is the coordinate of the first corner of a `'quad'`; the corners proceed clockwise.

`corner2(1:3,:) = 0.0`

The coordinate of the second corner of a `'quad'`.

`corner3(1:3,:) = 0.0`

The coordinate of the third corner of a `'quad'`.

`corner4(1:3,:) = 0.0`

The coordinate of the fourth corner of a `'quad'`.

box_lower_corner(1:3,:) = 0.0

This is the coordinate of the lower corner of a 'box'.

box_upper_corner(1:3,:) = 0.0

This is the coordinate of the upper corner of a 'box'.

sphere_center(1:3,:) = 0.0

This is the coordinate of 'sphere' center; it fixes the location.

sphere_radius(:) = 0.0

This is the radius for 'sphere'; it fixes the size.

B.4.26 &time_avg_params

This namelist controls the bookkeeping of time average and root mean square statistics for every point in the domain. Tracking these statistics enables visualization of variables like `p_tavg`, `u_trms`, etc. See the visualization output variable namelists `&volume_output_variables`, `&boundary_output_variables`, and `&sampling_output_variables` for details. When these statistics are tracked, the file `[project_rootname]_TAVG.1` maintains information across restarts. This statistics file is similar to the `[project_rootname].flow` restart file in that is not intended for the user to interact with directly.

```
&time_avg_params
  itime_avg           = 0
  prior_time_avg      = -1
  use_prior_time_avg  = 1
  tavg_header_version = 1
/
```

`itime_avg = 0`

This controls collection of temporal statistics.

'0' do not compute time averaging statistics.

'1' compute time averaging statistics required for visualization.

`prior_time_avg = -1`

This option is deprecated, see `use_prior_time_avg`.

`use_prior_time_avg = 1`

This controls if a prior execution should contribute to the temporal statistics.

'1' combines the prior statistics stored in `[project_rootname]_TAVG.1` with the statistics of this execution. If `[project_rootname]_TAVG.1` is not available in the current directory, only the statistics from this execution will be calculated.

'0' discards prior statistics. The file `[project_rootname]_TAVG.1` will be ignored, if it exists.

`tavg_header_version = 1`

This option controls the variables for which statistics are collected.

'1' for primitive variable averages and root mean squares.

'2' for primitive variable averages, primitive variable root mean squares, and the averages of `u'v',u'w',v'w',mu_t,vort_mag`.

B.4.27 &global

This namelist controls the frequency of visualization output and the logging of command line options. It also serves to control some global options otherwise set by command-line input

```
&global
  moving_grid                  = .false.
  grid_motion_only             = .false.
  grid_motion_and_dci_only     = .false.
  body_motion_only             = .false.
  boundary_animation_freq      = 0
  boundary_animation_freq_tavg = 0
  volume_animation_freq        = 0
  slice_freq                   = 0
  record_command_lines         = .false.
  recompute_turb_dist          = .false.
  turb_dist_update_freq        = 1
  heating_from_integral        = .true.
/
```

`moving_grid = .false.`

This governs whether the grid is moving or stationary

`grid_motion_only = .false.`

This turns off the flow solve during a simulation for which `moving_grid = .true.`. If the simulation involves overset grids, this command overrides `dci_on_the_fly` and DCI files are not output.

`grid_motion_and_dci_only = .false.`

This turns off the flow solve during a simulation for which `moving_grid = .true.`. If the simulation involves overset grids, this command honors `dci_on_the_fly` and DCI files are output if `dci_on_the_fly = .true.`.

`body_motion_only = .false.`

This turns off both the flow solve and the linear elasticity solve during a simulation for which `moving_grid = .true.` and `grid_motion = 'deform'`

`boundary_animation_freq = 0`

This is the visualization output frequency of the domain boundaries. Zero is no output, `-1` is output at the end of run, and a positive integer is periodic output every `boundary_animation_freq` iterations. See the `&boundary_output_variables` namelist for more details.

`boundary_animation_freq_tavg = 0`

This is the visualization output frequency of time-averaged data on the domain boundaries. Zero is no output, `-1` is output at the end of run, and a positive integer is periodic output every `boundary_animation_freq_tavg` iterations.

`volume_animation_freq = 0`

This is the visualization output frequency of the domain volume. Zero is no output, `-1` is output at the end of run, and a positive integer is periodic output every `volume_animation_freq` iterations. See `&volume_output_variables` namelist for more details.

`slice_freq = 0`

This is the output frequency of boundary slices for visualization and to obtain loads. Zero is no output, `-1` is output at the end of run, and a positive integer is periodic output every `slice_freq` iterations. See `&slice_data` namelist for more details.

`record_command_lines = .false.`

This creates a file `temp.commands` that contains the command line arguments

`recompute_turb_dist = .false.`

This is a flag that allows for the distance function to be recomputed after grid deformation or when overset grids are moved.

`turb_dist_update_freq = 1`

This is the frequency with which the distance function is updated when `recompute_turb_dist = .true.`.

`heating_from_integral = .true.`

This is a generic gas path parameter. If true, heating output is determined from integral conservation law. If false, heating output is determined from gradients to triangular or quadrilateral surface face averaged to common surface node. The false option is more robust for radiative equilibrium wall boundary conditions. The true option is thought to be a more accurate representation of the finite-volume solution.

B.4.28 &volume_output_variables

This namelist controls volume variable output. Output frequency is controlled by `volume_animation_freq` in the `&global` namelist. The resulting volume-data files have the following naming convention for `export_to='tecplot'` output:

```
if freq > 0:
[project_rootname]_part[P]_tec_volume_timestep[T](.dat|.plt|.szplt)
if freq < 0:
[project_rootname]_Part[P]_tec_volume(.dat|.plt|.szplt)
```

where `P` = 1,2,...,`nproc` (number of processors), `T` is the iteration number, and `N` is the value of `volume_animation_freq`. The file extension is `.dat` for ASCII Tecplot™ format, `.plt` for binary Tecplot™ format (2013 and earlier), and `.szplt` for new binary Tecplot™ format. Within the files, a single zone is written, with the zone title "time 0.0000000E+00 processor 32" where the time value is the integer iteration number for steady-state cases, and the current (non-dimensional) time for time-dependent cases.

A request to output an unavailable variable will overruled, i.e., `turb1` will be forced to `.false` regardless of user input when there is no turbulence model in the simulation.

```
&volume_output_variables
  export_to                   = 'tecplot'
  output_initial_state        = .false.
  x                           = .true.
  y                           = .true.
  z                           = .true.
  primitive_variables         = .true.
  rho                         = .false.
  u                           = .false.
  v                           = .false.
  w                           = .false.
  p                           = .false.
  entropy                     = .false.
  mach                        = .false.
  temperature                 = .false.
  iblank                      = .false.
  imesh                       = .false.
  vort_mag                    = .false.
  vort_x                      = .false.
  vort_y                      = .false.
  vort_z                      = .false.
  q_criterion                 = .false.
  div_vel                     = .false.
```

```
turbulent_fluctuations      = .false.
uuprime                     = .false.
vvprime                     = .false.
wwprime                     = .false.
uvprime                     = .false.
uwprime                     = .false.
vwprime                     = .false.
cp                          = .false.
dp_pinf                     = .false.
volume                      = .false.
residuals                   = .false.
res1                        = .false.
res2                        = .false.
res3                        = .false.
res4                        = .false.
res5                        = .false.
res_gcl                     = .false.
primitive_tavg              = .false.
rho_tavg                    = .false.
u_tavg                      = .false.
v_tavg                      = .false.
w_tavg                      = .false.
p_tavg                      = .false.
tt_tavg                     = .false.
tv_tavg                     = .false.
primitive_trms              = .false.
rho_trms                    = .false.
u_trms                      = .false.
v_trms                      = .false.
w_trms                      = .false.
p_trms                      = .false.
tt_trms                     = .false.
tv_trms                     = .false.
lambda1                     = .false.
lambda2                     = .false.
lambda3                     = .false.
lambda4                     = .false.
lambda5                     = .false.
lambda6                     = .false.
lambda7                     = .false.
htot                        = .false.
ttot                        = .false.
ptot                        = .false.
etot                        = .false.
processor_id                = .false.
```

```
  turb_ke                     = .false.
  turb_diss                   = .false.
  mu_t                        = .false.
  turb1                       = .false.
  turb2                       = .false.
  turb3                       = .false.
  turb4                       = .false.
  turb5                       = .false.
  turb6                       = .false.
  turb7                       = .false.
  turres1                     = .false.
  turres2                     = .false.
  turres3                     = .false.
  turres4                     = .false.
  turres5                     = .false.
  turres6                     = .false.
  turres7                     = .false.
  slen                        = .false.
  iflagslen                   = .false.
  hrles_blend                 = .false.
  reconstruction_limiter_phi1 = .false.
  reconstruction_limiter_phi2 = .false.
  reconstruction_limiter_phi3 = .false.
  reconstruction_limiter_phi4 = .false.
  reconstruction_limiter_phi5 = .false.
  tt                          = .false.
  tv                          = .false.
  sonic                       = .false.
  mixture_mol_weight          = .false.
  ev                          = .false.
  rho_i(1:n_species)          = .false.
  rho_i_tavg(1:n_species)     = .false.
  rho_i_trms(1:n_species)     = .false.
  mu                          = .false.
  id_l2g                      = .false.
  divided_residuals           = .false.
/
```

export_to = 'tecplot'

file format of volume export

'tecplot' is Tecplot™ format (one file written for each processor)

'cgns' is CGNS format, requires Fun3D to be configured with a CGNS library. This format already includes x, y, and z. Set these variables to .false. to avoid duplication.

`'fvuns'` is FieldView C-binary (Fortran stream) format. This format already includes `x`, `y`, and `z`. Set these variables to `.false.` to avoid duplication.

`'fv'` is depreciated. Slated for removal, use 'fvuns'

`'vtk'` is legacy VTK format This format already includes `x`, `y`, and `z`. Set these variables to `.false.` to avoid duplication.

`'csv'` is comma separated value format

`'sol'` is INRIA Metrix sol (ASCII) format

`'solb'` is INRIA Metrix solb (binary) format

`'bin'` is binary format without header or records

`'tec'` is a single image ASCII Tecplot™ format

`'raw_ascii'` is a single image ASCII space separated format

`'native'` is the most efficient way to export the entire flow field to disk at every time step when the grid is over a billion elements, but requires specialized visualization tools to read.

`output_initial_state = .false.`

When `.true.`, this causes requested volume data to be written for the initial state of the solution in the current run.

`x = .true.`

X-coordinate

`y = .true.`

Y-coordinate

`z = .true.`

Z-coordinate

`primitive_variables = .true.`

Output primitive variables: `rho`, `u`, `v`, `w`, and `p` (`p` `u`, `v`, `w` for `eqn_type = 'incompressible'`)

`rho = .false.`

Density (not available for `eqn_type = 'incompressible'`)

`u = .false.`

X-component of velocity

`v = .false.`

Y-component of velocity

`w = .false.`

Z-component of velocity

`p = .false.`

Pressure

`entropy = .false.`

Entropy (not available for `eqn_type = 'generic gas'`)

`mach = .false.`

Mach number (not available for `eqn_type = 'incompressible'`)

`temperature = .false.`

Temperature (not available for `eqn_type = 'incompressible'`)

`iblank = .false.`

I-blanking variable (default becomes `.true.` for overset mesh cases)

`imesh = .false.`

For overset mesh systems, index of associated component grid where `0` indicates background grid

`vort_mag = .false.`

Vorticity magnitude

`vort_x = .false.`

X-component of vorticity

`vort_y = .false.`

Y-component of vorticity

`vort_z = .false.`

Z-component of vorticity

`q_criterion = .false.`

Q Criterion, the second invariant of ∇V

`div_vel = .false.`

Velocity divergence

`turbulent_fluctuations = .false.`

Activate all the following `XYprime` turbulent shear stresses normalized by u_{ref}^2; the definition of these variables depends on the turbulence model, see http://turbmodels.larc.nasa.gov/noteonrunning.html for details

`uuprime = .false.`

Turbulence fluctuation, $u'u'$

`vvprime = .false.`

Turbulence fluctuation, $v'v'$

`wwprime = .false.`

Turbulence fluctuation, $w'w'$

`uvprime = .false.`

Turbulence fluctuation, $u'v'$

`uwprime = .false.`

Turbulence fluctuation, $u'w'$

`vwprime = .false.`

Turbulence fluctuation, $v'w'$

`cp = .false.`

Pressure coefficient (not available for `eqn_type = 'generic gas'`)

`dp_pinf = .false.`

Normalized delta pressure $(p - p_\infty)/p_\infty$

`volume = .false.`

Dual-cell volume size

`residuals = .false.`

Activate all `resN` variables

`res1 = .false.`

Residual of equation 1, density

`res2 = .false.`

Residual of equation 2, x-momentum

`res3 = .false.`

Residual of equation 3, y-momentum

`res4 = .false.`

Residual of equation 4, z-momentum

`res5 = .false.`

Residual of equation 5, energy

`res_gcl = .false.`

For moving meshes, residual of grid conservation law

`primitive_tavg = .false.`

Output time-averaged primitives (requires `&time_avg_params` namelist): `rho_tavg`, `u_tavg`, `v_tavg`, `w_tavg`, and `p_tavg`

`rho_tavg = .false.`

Time-averaged density

`u_tavg = .false.`

Time-averaged x-component of velocity

`v_tavg = .false.`

Time-averaged y-component of velocity

`w_tavg = .false.`

Time-averaged z-component of velocity

`p_tavg = .false.`

Time-averaged pressure

`tt_tavg = .false.`

Time-averaged translational-rotational temperature (only available for `eqn_type = 'generic gas'`)

`tv_tavg = .false.`

Time-averaged vibrational-electronic temperature (only available for `eqn_type = 'generic gas'`)

`primitive_trms = .false.`

Output root mean squared primitives (requires `&time_avg_params` namelist): `rho_trms`, `u_trms`, `v_trms`, `w_trms`, and `p_trms`

`rho_trms = .false.`

RMS-average of density

`u_trms = .false.`

RMS-average of x-component of velocity

`v_trms = .false.`

RMS-average of y-component of velocity

`w_trms = .false.`

RMS-average of z-component of velocity

`p_trms = .false.`

RMS-average of pressure

`tt_trms = .false.`

RMS-average of translational-rotational temperature (only available for `eqn_type = 'generic gas'`)

`tv_trms = .false.`

RMS-average of vibrational-electronic temperature (only available for `eqn_type = 'generic gas'`)

`lambda1 = .false.`

Adjoint Lagrange multiplier for equation 1 (when running the adjoint, the primitive variables are turned off, and this is turned on)

`lambda2 = .false.`

Adjoint Lagrange multiplier for equation 2 (when running the adjoint, the primitive variables are turned off, and this is turned on)

`lambda3 = .false.`

Adjoint Lagrange multiplier for equation 3 (when running the adjoint, the primitive variables are turned off, and this is turned on)

`lambda4 = .false.`

Adjoint Lagrange multiplier for equation 4 (when running the adjoint, the primitive variables are turned off, and this is turned on)

`lambda5 = .false.`

Adjoint Lagrange multiplier for equation 5 (when running the adjoint, the primitive variables are turned off, and this is turned on)

`lambda6 = .false.`

Adjoint Lagrange multiplier for equation 6 (when running the adjoint, the primitive variables are turned off, and this is turned on)

`lambda7 = .false.`

Adjoint Lagrange multiplier for equation 7 (when running the adjoint, the primitive variables are turned off, and this is turned on)

`htot = .false.`

Total enthalpy per unit volume (not available for `eqn_type = 'generic gas', 'incompressible'`)

`ttot = .false.`

Total temperature (not available for `eqn_type = 'generic gas', 'incompressible'`)

`ptot = .false.`

Total pressure (not available for `eqn_type = 'generic gas'`)

`etot = .false.`

Total energy per unit volume (not available for `eqn_type = 'incompressible'`)

`processor_id = .false.`

Processor on which a node resides

`turb_ke = .false.`

Turbulence kinetic energy

`turb_diss = .false.`

Turbulence dissipation rate

`mu_t = .false.`

Turbulent eddy viscosity

`turb1 = .false.`

Turbulence variable 1 (model dependent)

`turb2 = .false.`

Turbulence variable 2 (model dependent)

`turb3 = .false.`

Turbulence variable 3 (model dependent)

`turb4 = .false.`

Turbulence variable 4 (model dependent)

`turb5 = .false.`

Turbulence variable 5 (model dependent)

`turb6 = .false.`

Turbulence variable 6 (model dependent)

`turb7 = .false.`

Turbulence variable 7 (model dependent)

`turres1 = .false.`

Residual of 1st turbulence equation

`turres2 = .false.`

Residual of 2nd turbulence equation

`turres3 = .false.`

Residual of 3rd turbulence equation

`turres4 = .false.`

Residual of 4th turbulence equation

`turres5 = .false.`

Residual of 5th turbulence equation

`turres6 = .false.`

Residual of 6th turbulence equation

`turres7 = .false.`

Residual of 7th turbulence equation

`slen = .false.`

Length to the nearest solid wall boundary

`iflagslen = .false.`

Turbulence model distance function closest boundary entity. (a negative sign indicates the node has been prescribed as laminar)

`hrles_blend = .false.`

HRLES blending function

`reconstruction_limiter_phi1 = .false.`

ϕ for the node-based reconstruction limiters (equation 1)

`reconstruction_limiter_phi2 = .false.`

ϕ for the node-based reconstruction limiters (equation 2)

`reconstruction_limiter_phi3 = .false.`

ϕ for the node-based reconstruction limiters (equation 3)

`reconstruction_limiter_phi4 = .false.`

ϕ for the node-based reconstruction limiters (equation 4)

`reconstruction_limiter_phi5 = .false.`

ϕ for the node-based reconstruction limiters (equation 5)

`tt = .false.`

Translational temperature (only available for `eqn_type = 'generic'`)

`tv = .false.`

Vibrational temperature (only available for `eqn_type = 'generic'`)

`sonic = .false.`

Frozen speed of sound (only available for `eqn_type = 'generic'`)

`mixture_mol_weight = .false.`

Mixture molecular weight (only available for `eqn_type = 'generic'`)

`ev = .false.`

Vibrational energy (only available for `eqn_type = 'generic'`)

`rho_i(1:n_species) = .false.`

Species density (only available for `eqn_type = 'generic'`)

`rho_i_tavg(1:n_species) = .false.`

Time averaged species density (only available for `eqn_type = 'generic'`)

`rho_i_trms(1:n_species) = .false.`

RMS-average of species density (only available for `eqn_type = 'generic'`)

`mu = .false.`

Total viscosity

`id_l2g = .false.`

Local-to-global node map

`divided_residuals = .false.`

adds a `_vol` suffix to the residual output variable names and divide by volume

B.4.29 &boundary_output_variables

This namelist controls the boundary variable output. Output frequency is controlled by `boundary_animation_freq` in the `&global` namelist. By default, the output of solution data for all solid surfaces in 3D and on one y-constant symmetry plane in 2D is included unless `boundary_list` is specified.

Each time boundary data output is triggered, all output boundaries are written to one file with the following naming convention:

```
[project_rootname]_tec_boundary_timestep[T](.dat|.plt|.szplt)  if N > 0
[project_rootname]_tec_boundary(.dat|.plt|.szplt)              if N < 0
```

where `T` is the iteration number and `N` is the value of `boundary_animation_freq`. The file extension is `.dat` for ASCII Tecplot™ format, `.plt` for binary Tecplot™ format (2013 and earlier), and `.szplt` for new binary Tecplot™ format. Within the files, each boundary is written as a separate zone. The zones are identified with the title "time 0.0000000E+00 boundary 5" where the time value is the integer iteration number for steady-state cases, and the current (non-dimensional) time for time-dependent cases.

By default, output is in the inertial reference frame. For moving body problems, the `&observer_motion` namelist can be used to change the visualization reference system to a body reference system or a reference system with arbitrary motion.

A request to output an unavailable variable will overruled, i.e., `turb1` will be forced to `.false` regardless of user input when there is no turbulence model in the simulation.

```
&boundary_output_variables
  number_of_boundaries    = 0
  boundary_list           = ''
  output_initial_state    = .false.
  x                       = .true.
  y                       = .true.
  z                       = .true.
  primitive_variables     = .true.
  rho                     = .false.
  u                       = .false.
  v                       = .false.
  w                       = .false.
  p                       = .false.
  entropy                 = .false.
  mach                    = .false.
  temperature             = .false.
  iblank                  = .false.
  imesh                   = .false.
  vort_mag                = .false.
```

```
vort_x                  = .false.
vort_y                  = .false.
vort_z                  = .false.
q_criterion             = .false.
div_vel                 = .false.
turbulent_fluctuations  = .false.
uuprime                 = .false.
vvprime                 = .false.
wwprime                 = .false.
uvprime                 = .false.
uwprime                 = .false.
vwprime                 = .false.
cp                      = .false.
dp_pinf                 = .false.
volume                  = .false.
residuals               = .false.
res1                    = .false.
res2                    = .false.
res3                    = .false.
res4                    = .false.
res5                    = .false.
res_gcl                 = .false.
primitive_tavg          = .false.
rho_tavg                = .false.
u_tavg                  = .false.
v_tavg                  = .false.
w_tavg                  = .false.
p_tavg                  = .false.
rho_i_tavg(1:n_species) = .false.
tt_tavg                 = .false.
tv_tavg                 = .false.
primitive_trms          = .false.
rho_trms                = .false.
u_trms                  = .false.
v_trms                  = .false.
w_trms                  = .false.
p_trms                  = .false.
rho_i_trms(1:n_species) = .false.
tt_trms                 = .false.
tv_trms                 = .false.
lambda1                 = .false.
lambda2                 = .false.
lambda3                 = .false.
lambda4                 = .false.
lambda5                 = .false.
```

```
lambda6                 = .false.
lambda7                 = .false.
htot                    = .false.
ttot                    = .false.
ptot                    = .false.
etot                    = .false.
processor_id            = .false.
turb_ke                 = .false.
turb_diss               = .false.
mu_t                    = .false.
turb1                   = .false.
turb2                   = .false.
turb3                   = .false.
turb4                   = .false.
turb5                   = .false.
turb6                   = .false.
turb7                   = .false.
turres1                 = .false.
turres2                 = .false.
turres3                 = .false.
turres4                 = .false.
turres5                 = .false.
turres6                 = .false.
turres7                 = .false.
de_turb1                = .false.
slen                    = .false.
tt                      = .false.
tv                      = .false.
sonic                   = .false.
mixture_mol_weight      = .false.
ev                      = .false.
rho_i(1:n_species)      = .false.
mu                      = .false.
id_l2g                  = .false.
yplus                   = .false.
recovery_temperature    = .false.
turb_mach               = .false.
turbindex               = .false.
average_velocity        = .false.
uavg                    = .false.
vavg                    = .false.
wavg                    = .false.
surface_normals         = .false.
cf_x                    = .false.
cf_y                    = .false.
```

```
  cf_z                    = .false.
  skinfr                  = .false.
  cq                      = .false.
  shear_x                 = .false.
  shear_y                 = .false.
  shear_z                 = .false.
  heating                 = .false.
  mdot                    = .false.
  utau_wf                 = .false.
  phi_wf                  = .false.
  mu_t_wf                 = .false.
  k_wallfunction_bc       = .false.
  omega_wallfunction_bc   = .false.
/
```

number_of_boundaries = 0

Number of boundary patches given in `boundary_list` (if `-1` is given, this number is computed from `boundary_list`)

boundary_list = ''

List of boundary patch numbers. Commas and dashes can be used to specify ranges, i.e., `'1,2,5-7'`. If nothing is specified, then all but flow-through boundaries are output for 3D or a single symmetry plane in 2D.

output_initial_state = .false.

When `.true.`, this causes requested boundary data to be written for the initial state of the solution in the current run.

x = .true.

X-coordinate

y = .true.

Y-coordinate

z = .true.

Z-coordinate

primitive_variables = .true.

Output primitive variables: `rho`, `u`, `v`, `w`, and `p` (`p` `u`, `v`, `w` for `eqn_type = 'incompressible'`)

rho = .false.

Density (not available for `eqn_type = 'incompressible'`)

`u = .false.`

X-component of velocity

`v = .false.`

Y-component of velocity

`w = .false.`

Z-component of velocity

`p = .false.`

Pressure

`entropy = .false.`

Entropy

`mach = .false.`

Mach number (not available for `eqn_type = 'incompressible'`)

`temperature = .false.`

Temperature (not available for `eqn_type = 'generic gas', 'incompressible'`)

`iblank = .false.`

I-blanking variable (default becomes `.true.` for overset mesh cases)

`imesh = .false.`

For overset mesh systems, index of associated component grid where `0` indicates background grid

`vort_mag = .false.`

Vorticity magnitude

`vort_x = .false.`

X-component of vorticity

`vort_y = .false.`

Y-component of vorticity

`vort_z = .false.`

Z-component of vorticity

`q_criterion = .false.`

Q Criterion, the second invariant of ∇V

`div_vel = .false.`

Velocity divergence

`turbulent_fluctuations = .false.`

Activate all the following `XYprime` turbulent shear stresses normalized by u_{ref}^2; the definition of these variables depends on the turbulence model, see http://turbmodels.larc.nasa.gov/noteonrunning.html for details

`uuprime = .false.`

Turbulence fluctuation, $u'u'$

`vvprime = .false.`

Turbulence fluctuation, $v'v'$

`wwprime = .false.`

Turbulence fluctuation, $w'w'$

`uvprime = .false.`

Turbulence fluctuation, $u'v'$

`uwprime = .false.`

Turbulence fluctuation, $u'w'$

`vwprime = .false.`

Turbulence fluctuation, $v'w'$

`cp = .false.`

Pressure coefficient (not available for `eqn_type = 'generic gas'`)

`dp_pinf = .false.`

Normalized delta pressure $(p - p_\infty)/p_\infty$

`volume = .false.`

Dual-cell volume size

`residuals = .false.`

Activate all `resN` variables.

`res1 = .false.`

Residual of equation 1, density (pressure residual for `eqn_type = 'incompressible'`)

`res2 = .false.`

Residual of equation 2, x-momentum

`res3 = .false.`

Residual of equation 3, y-momentum

`res4 = .false.`

Residual of equation 4, z-momentum

`res5 = .false.`

Residual of equation 5, energy (not available for `eqn_type = 'incompressible'`)

`res_gcl = .false.`

For moving meshes, residual of grid conservation law

`primitive_tavg = .false.`

Output time-averaged primitives (requires `&time_avg_params` namelist): `rho_tavg`, `u_tavg`, `v_tavg`, `w_tavg`, and `p_tavg`

`rho_tavg = .false.`

Time-averaged density

`u_tavg = .false.`

Time-averaged x-component of velocity

`v_tavg = .false.`

Time-averaged y-component of velocity

`w_tavg = .false.`

Time-averaged z-component of velocity

`p_tavg = .false.`

Time-averaged pressure

`rho_i_tavg(1:n_species) = .false.`

Time-averaged species density (only available for `eqn_type = 'generic'`)

`tt_tavg = .false.`

Time-averaged translational-rotational temperature (only available for `eqn_type = 'generic'`)

`tv_tavg = .false.`

Time-averaged vibrational-electronic temperature (only available for `eqn_type = 'generic'`)

`primitive_trms = .false.`

Output root mean squared primitives (requires `&time_avg_params` namelist): `rho_trms`, `u_trms`, `v_trms`, `w_trms`, and `p_trms`

`rho_trms = .false.`

RMS-average of density

`u_trms = .false.`

RMS-average of x-component of velocity

`v_trms = .false.`

RMS-average of y-component of velocity

`w_trms = .false.`

RMS-average of z-component of velocity

`p_trms = .false.`

RMS-average of pressure

`rho_i_trms(1:n_species) = .false.`

RMS-average of species density (only available for `eqn_type = 'generic'`)

`tt_trms = .false.`

RMS-average of translational-rotational temperature (only available for `eqn_type = 'generic'`)

`tv_trms = .false.`

RMS-average of vibrational-electronic temperature (only available for `eqn_type = 'generic'`)

`lambda1 = .false.`

Adjoint Lagrange multiplier for equation 1 (when running the adjoint, the primitive variables are turned off, and this is turned on)

`lambda2 = .false.`

Adjoint Lagrange multiplier for equation 2 (when running the adjoint, the primitive variables are turned off, and this is turned on)

`lambda3 = .false.`

Adjoint Lagrange multiplier for equation 3 (when running the adjoint, the primitive variables are turned off, and this is turned on)

`lambda4 = .false.`

Adjoint Lagrange multiplier for equation 4 (when running the adjoint, the primitive variables are turned off, and this is turned on)

`lambda5 = .false.`

Adjoint Lagrange multiplier for equation 5 (when running the adjoint, the primitive variables are turned off, and this is turned on)

`lambda6 = .false.`

Adjoint Lagrange multiplier for equation 6 (when running the adjoint, the primitive variables are turned off, and this is turned on)

`lambda7 = .false.`

Adjoint Lagrange multiplier for equation 7 (when running the adjoint, the primitive variables are turned off, and this is turned on)

`htot = .false.`

Total enthalpy per unit volume (not available for `eqn_type = 'incompressible'`)

`ttot = .false.`

Total temperature (not available for `eqn_type = 'incompressible'`)

`ptot = .false.`

Total pressure

`etot = .false.`

Total energy per unit volume (not available for `eqn_type = 'incompressible'`)

`processor_id = .false.`

Processor on which a node resides

`turb_ke = .false.`

Turbulence kinetic energy

`turb_diss = .false.`

Turbulence dissipation rate

`mu_t = .false.`

Turbulent eddy viscosity

`turb1 = .false.`

Turbulence variable 1 (model dependent)

`turb2 = .false.`

Turbulence variable 2 (model dependent)

`turb3 = .false.`

Turbulence variable 3 (model dependent)

`turb4 = .false.`

Turbulence variable 4 (model dependent)

`turb5 = .false.`

Turbulence variable 5 (model dependent)

`turb6 = .false.`

Turbulence variable 6 (model dependent)

`turb7 = .false.`

Turbulence variable 7 (model dependent)

`turres1 = .false.`

Residual of 1st turbulence equation

`turres2 = .false.`

Residual of 2nd turbulence equation

`turres3 = .false.`

Residual of 3rd turbulence equation

`turres4 = .false.`

Residual of 4th turbulence equation

`turres5 = .false.`

Residual of 5th turbulence equation

`turres6 = .false.`

Residual of 6th turbulence equation

`turres7 = .false.`

Residual of 7th turbulence equation

`de_turb1 = .false.`

Discretization error of 1st turbulence equation

`slen = .false.`

Length to the nearest solid wall boundary

`tt = .false.`

Translational temperature, (only available for `eqn_type = 'generic'`)

`tv = .false.`

Vibrational temperature, (only available for `eqn_type = 'generic'`)

`sonic = .false.`

Frozen speed of sound, (only available for `eqn_type = 'generic'`)

`mixture_mol_weight = .false.`

Mixture molecular weight, (only available for `eqn_type = 'generic'`)

`ev = .false.`

Vibrational energy, (only available for `eqn_type = 'generic'`)

`rho_i(1:n_species) = .false.`

Species concentration, (only available for `eqn_type = 'generic'`)

`mu = .false.`

Total viscosity (only available for `eqn_type = 'generic'`)

`id_l2g = .false.`

Local-to-global node map

`yplus = .false.`

Dimensionless wall distance, y^+

`recovery_temperature = .false.`

Recovery temperature (only available for `eqn_type = 'generic'`, a Prandtl number of 0.72 is assumed)

`turb_mach = .false.`

Turbulent Mach number (only available for `eqn_type = 'compressible'`)

`turbindex = .false.`

Turbulent index. When zero, the `turbindex` indicates laminar flow; when 1 it indicates turbulent flow. When in-between, it is indeterminate (may be laminar, turbulent, or transitional). The `turbindex` should be used cautiously, solely as a rough guide concerning the state of the boundary layer. Other measures can also give an indication, such as the maximum nondimensional eddy viscosity level within the boundary layer "above" the wall (when greater than approximately 1, the boundary layer is typically considered turbulent). However, the peak μ_t is a difficult measure to find in 3-D, as it must be searched along lines normal to walls. The turbulence index at walls uses equation (10) from Spalart and Allmaras, [33] which involves the wall-normal gradient of the Spalart-Allmaras (SA) turbulence variable $\tilde{\nu}$ at the wall. For other turbulence models, eddy viscosity is translated into SA variable $\tilde{\nu}$ form, in order to make use of the SA formula. Therefore, this formula is formally appropriate for SA, but is only an approximate (crude) indicator for other models.

`average_velocity = .false.`

Turns on `uavg`, `vavg`, `wavg`

`uavg = .false.`

X-component of average velocity near a wall (used to plot surface streamlines)

`vavg = .false.`

Y-component of average velocity near a wall (used to plot surface streamlines)

`wavg = .false.`

Z-component of average velocity near a wall (used to plot surface streamlines)

`surface_normals = .false.`

Turns on surface normals: `xnormal`, `ynormal`, `znormal`; direction of the normal points into the computational domain. Note that individual normal components are not selectable. These are area-weighted normals, not unit normals. The magnitude of any particular normal is the area of the dual-grid face centered about the surface node at the base of the normal.

`cf_x = .false.`

X-component of skin friction

`cf_y = .false.`

Y-component of skin friction

`cf_z = .false.`

Z-component of skin friction

`skinfr = .false.`

Skin friction magnitude with sign determined by the inner product of the skin friction vector and the freestream velocity vector

`cq = .false.`

Temperature gradient normal to the wall, with "dimensions" of nondimensional temperature per unit grid length for `eqn_type = 'compressible'`. Heating rate non-dimensionalized by $\rho_\infty V_\infty^3$ for `eqn_type = 'generic'`.

`shear_x = .false.`

X-component of shear on the boundary, in MKS units

`shear_y = .false.`

Y-component of shear on the boundary, in MKS units

`shear_z = .false.`

Z-component of shear on the boundary, in MKS units

`heating = .false.`

Heating on the boundary in Watts per centimeter squared (for `eqn_type = 'compressible'`, make sure the grid is in meters)

`mdot = .false.`

Dimensionless blowing rate non-dimensionalized by $\rho_\infty V_\infty$

`utau_wf = .false.`

Friction velocity calculated from a wall function model.

`phi_wf = .false.`

Pressure gradient term from a wall function model.

`mu_t_wf = .false.`

Wall function turbulent eddy viscosity at the wall.

`k_wallfunction_bc = .false.`

Turbulent kinetic energy wall function boundary condition.

`omega_wallfunction_bc = .false.`

Omega wall function boundary condition.

B.4.30 &sampling_output_variables

This namelist controls output of variables from user defined regions of the computational domain. To use sampling, the `&sampling_parameters` namelist must be used to define the sampling geometries and the `sampling_frequency(:)` set for each geometry.

The resulting sampling data files will have the following naming convention:

```
if N > 0:
[project_rootname]_tec_sampling_geom[G]_timestep[T](.dat|.plt|.szplt)
if N < 0:
[project_rootname]_tec_sampling_geom[G](.dat|.plt|.szplt)
```

where `G` = 1,2,...,`number_of_geometries`, `T` is the iteration number, and `N` is the value of `sampling_frequency(G)`. The file extension is `.dat` for ASCII Tecplot™ format, `.plt` for binary Tecplot™ format (2013 and earlier), and `.szplt` for new binary Tecplot™ format. A global image of the sampling surface is output with the zone title "time 0.0000000E+00 geom 3" where the time value is the integer iteration number for steady-state cases, and the current (nondimensional) time for time-dependent cases.

A request to output an unavailable variable will overruled, i.e., `turb1` will be forced to `.false` regardless of user input when there is no turbulence model in the simulation.

```
&sampling_output_variables
  x                          = .true.
  y                          = .true.
  z                          = .true.
  primitive_variables        = .true.
  rho                        = .false.
  rho_i(:)                   = .false.
  u                          = .false.
  v                          = .false.
  w                          = .false.
  p                          = .false.
  entropy                    = .false.
  mach                       = .false.
  temperature                = .false.
  tt                         = .false.
  tv                         = .false.
  mu                         = .false.
  iblank                     = .false.
  imesh                      = .false.
  vort_mag                   = .false.
  vort_x                     = .false.
  vort_y                     = .false.
```

```
vort_z                      = .false.
q_criterion                 = .false.
div_vel                     = .false.
turbulent_fluctuations      = .false.
uuprime                     = .false.
vvprime                     = .false.
wwprime                     = .false.
uvprime                     = .false.
uwprime                     = .false.
vwprime                     = .false.
cp                          = .false.
dp_pinf                     = .false.
volume                      = .false.
residuals                   = .false.
res1                        = .false.
res2                        = .false.
res3                        = .false.
res4                        = .false.
res5                        = .false.
res_gcl                     = .false.
primitive_tavg              = .false.
rho_tavg                    = .false.
u_tavg                      = .false.
v_tavg                      = .false.
w_tavg                      = .false.
p_tavg                      = .false.
rho_i_tavg(:)               = .false.
tt_tavg                     = .false.
tv_tavg                     = .false.
mu_t_tavg                   = .false.
vort_mag_tavg               = .false.
vort_x_tavg                 = .false.
vort_y_tavg                 = .false.
vort_z_tavg                 = .false.
primitive_trms              = .false.
rho_trms                    = .false.
u_trms                      = .false.
v_trms                      = .false.
w_trms                      = .false.
p_trms                      = .false.
rho_i_trms(:)               = .false.
tt_trms                     = .false.
tv_trms                     = .false.
lambda1                     = .false.
lambda2                     = .false.
```

```
lambda3                     = .false.
lambda4                     = .false.
lambda5                     = .false.
lambda6                     = .false.
lambda7                     = .false.
htot                        = .false.
ttot                        = .false.
ptot                        = .false.
etot                        = .false.
processor_id                = .false.
turb_ke                     = .false.
turb_diss                   = .false.
mu_t_wf                     = .false.
mu_t                        = .false.
turb1                       = .false.
turb2                       = .false.
turb3                       = .false.
turb4                       = .false.
turb5                       = .false.
turb6                       = .false.
turb7                       = .false.
turres1                     = .false.
turres2                     = .false.
turres3                     = .false.
turres4                     = .false.
turres5                     = .false.
turres6                     = .false.
turres7                     = .false.
slen                        = .false.
iflagslen                   = .false.
hrles_blend                 = .false.
cdesdelta_des_length        = .false.
dtilde_des_length           = .false.
rd_ddes_length              = .false.
fd_ddes_blend               = .false.
dtilde_ddes_length          = .false.
vort_x_rms                  = .false.
vort_y_rms                  = .false.
vort_z_rms                  = .false.
vort_mag_rms                = .false.
yplus                       = .false.
cmu_star                    = .false.
mu_t_ratio                  = .false.
iib                         = .false.
iiib                        = .false.
```

```
  uplus                        = .false.
  kplus                        = .false.
  wplus                        = .false.
  yplusretau                   = .false.
  t11plus                      = .false.
  t12plus                      = .false.
  t13plus                      = .false.
  t22plus                      = .false.
  t23plus                      = .false.
  t33plus                      = .false.
  bird_breakdown               = .false.
  vgradrho                     = .false.
  f_r1                         = .false.
  xi_k                         = .false.
  reconstruction_limiter_phi1 = .false.
  reconstruction_limiter_phi2 = .false.
  reconstruction_limiter_phi3 = .false.
  reconstruction_limiter_phi4 = .false.
  reconstruction_limiter_phi5 = .false.
  s_modulus                    = .false.
  w_modulus                    = .false.
  vorticity_shell              = .false.
/
```

`x = .true.`

X-coordinate

`y = .true.`

Y-coordinate

`z = .true.`

Z-coordinate

`primitive_variables = .true.`

Output primitive variables: `rho`, `u`, `v`, `w`, and `p` (`p` `u`, `v`, `w` for `eqn_type = 'incompressible'`)

`rho = .false.`

Density (not available for `eqn_type = 'incompressible'`)

`rho_i(:) = .false.`

Species densities (not available for `eqn_type = 'compressible', 'incompressible'`)

`u = .false.`

X-component of velocity

`v = .false.`

Y-component of velocity

`w = .false.`

Z-component of velocity

`p = .false.`

Pressure

`entropy = .false.`

Entropy

`mach = .false.`

Mach number (not available for `eqn_type = 'incompressible'`)

`temperature = .false.`

Temperature (not available for `eqn_type = 'incompressible'`)

`tt = .false.`

Translational-rotational temperature in the generic gas path (only available for `eqn_type = 'generic gas'`)

`tv = .false.`

Vibrational-electronic temperature in the generic gas path (only available for `eqn_type = 'generic gas'`)

`mu = .false.`

Molecular viscosity

`iblank = .false.`

I-blanking variable (default becomes `.true.` for overset mesh cases)

`imesh = .false.`

For overset mesh systems, index of associated component grid where `0` indicates background grid

`vort_mag = .false.`

Vorticity magnitude

`vort_x = .false.`

X-component of vorticity

`vort_y = .false.`

Y-component of vorticity

`vort_z = .false.`

Z-component of vorticity

`q_criterion = .false.`

Q Criterion, the second invariant of ∇V

`div_vel = .false.`

Velocity divergence

`turbulent_fluctuations = .false.`

Activate all the following `XYprime` turbulent shear stresses normalized by u_{ref}^2; the definition of these variables depends on the turbulence model, see http://turbmodels.larc.nasa.gov/noteonrunning.html for details

`uuprime = .false.`

Turbulence fluctuation, $u'u'$

`vvprime = .false.`

Turbulence fluctuation, $v'v'$

`wwprime = .false.`

Turbulence fluctuation, $w'w'$

`uvprime = .false.`

Turbulence fluctuation, $u'v'$

`uwprime = .false.`

Turbulence fluctuation, $u'w'$

`vwprime = .false.`

Turbulence fluctuation, $v'w'$

`cp = .false.`

Pressure coefficient

`dp_pinf = .false.`

Normalized delta pressure $(p - p_\infty)/p_\infty$

`volume = .false.`

Dual-cell volume size

`residuals = .false.`

Activate all `resN` variables

`res1 = .false.`

Residual of equation 1, density (pressure for `eqn_type = 'incompressible'`)

`res2 = .false.`

Residual of equation 2, x-momentum

`res3 = .false.`

Residual of equation 3, y-momentum

`res4 = .false.`

Residual of equation 4, z-momentum

`res5 = .false.`

Residual of equation 5, energy (not available for `eqn_type = 'incompressible'`)

`res_gcl = .false.`

For moving meshes, residual of grid conservation law

`primitive_tavg = .false.`

Output time-averaged primitives (requires `&time_avg_params` namelist): `rho_tavg`, `u_tavg`, `v_tavg`, `w_tavg`, and `p_tavg`

`rho_tavg = .false.`

Time-averaged density

`u_tavg = .false.`

Time-averaged x-component of velocity

`v_tavg = .false.`

Time-averaged y-component of velocity

`w_tavg = .false.`

Time-averaged z-component of velocity

`p_tavg = .false.`

Time-averaged pressure

`rho_i_tavg(:) = .false.`

Time-averaged species densities (not available for `eqn_type = 'compressible' , 'incompressible'`)

`tt_tavg = .false.`

Time-averaged translational-rotational temperature (not available for `eqn_type = 'compressible', 'incompressible'`)

`tv_tavg = .false.`

Time-averaged vibrational-electronic temperature (not available for `eqn_type = 'compressible', 'incompressible'`)

`mu_t_tavg = .false.`

Time-averaged turbulent eddy viscosity (not available for `eqn_type = 'generic gas'`)

`vort_mag_tavg = .false.`

Time-averaged vorticity magnitude

`vort_x_tavg = .false.`

Time-averaged x-component vorticity

`vort_y_tavg = .false.`

Time-averaged y-component vorticity

`vort_z_tavg = .false.`

Time-averaged z-component vorticity

`primitive_trms = .false.`

Output root mean squared primitives (requires `&time_avg_params` namelist): `rho_trms`, `u_trms`, `v_trms`, `w_trms`, and `p_trms`

`rho_trms = .false.`

RMS-average of density

`u_trms = .false.`

RMS-average of x-component of velocity

`v_trms = .false.`

RMS-average of y-component of velocity

`w_trms = .false.`

RMS-average of z-component of velocity

`p_trms = .false.`

RMS-average of pressure

`rho_i_trms(:) = .false.`

RMS-average of species densities (not available for `eqn_type = 'compressible', 'incompressible'`)

`tt_trms = .false.`

RMS-average of translational-rotational temperature (not available for `eqn_type = 'compressible', 'incompressible'`)

`tv_trms = .false.`

RMS-average of vibrational-electronic temperature (not available for `eqn_type = 'compressible', 'incompressible'`)

`lambda1 = .false.`

Adjoint Lagrange multiplier for equation 1 (when running the adjoint, the primitive variables are turned off, and this is turned on)

`lambda2 = .false.`

Adjoint Lagrange multiplier for equation 2 (when running the adjoint, the primitive variables are turned off, and this is turned on)

`lambda3 = .false.`

Adjoint Lagrange multiplier for equation 3 (when running the adjoint, the primitive variables are turned off, and this is turned on)

`lambda4 = .false.`

Adjoint Lagrange multiplier for equation 4 (when running the adjoint, the primitive variables are turned off, and this is turned on)

`lambda5 = .false.`

Adjoint Lagrange multiplier for equation 5 (when running the adjoint, the primitive variables are turned off, and this is turned on)

`lambda6 = .false.`

Adjoint Lagrange multiplier for equation 6 (when running the adjoint, the primitive variables are turned off, and this is turned on)

`lambda7 = .false.`

Adjoint Lagrange multiplier for equation 7 (when running the adjoint, the primitive variables are turned off, and this is turned on)

`htot = .false.`

Total enthalpy per unit volume (not available for `eqn_type = 'incompressible'`)

`ttot = .false.`

Total temperature (not available for `eqn_type = 'incompressible'`)

`ptot = .false.`

Total pressure

etot = .false.

Total energy per unit volume (not available for eqn_type = 'incompressible')

processor_id = .false.

Processor on which a node resides

turb_ke = .false.

Turbulence kinetic energy

turb_diss = .false.

Turbulence dissipation rate

mu_t_wf = .false.

Turbulent eddy viscosity at the wall from a wall function model.

mu_t = .false.

Turbulent eddy viscosity

turb1 = .false.

Turbulence variable 1 (model dependent)

turb2 = .false.

Turbulence variable 2 (model dependent)

turb3 = .false.

Turbulence variable 3 (model dependent)

turb4 = .false.

Turbulence variable 4 (model dependent)

turb5 = .false.

Turbulence variable 5 (model dependent)

turb6 = .false.

Turbulence variable 6 (model dependent)

turb7 = .false.

Turbulence variable 7 (model dependent)

turres1 = .false.

Residual of 1st turbulence equation

turres2 = .false.

Residual of 2nd turbulence equation

`turres3 = .false.`

Residual of 3rd turbulence equation

`turres4 = .false.`

Residual of 4th turbulence equation

`turres5 = .false.`

Residual of 5th turbulence equation

`turres6 = .false.`

Residual of 6th turbulence equation

`turres7 = .false.`

Residual of 7th turbulence equation

`slen = .false.`

Length to the nearest solid wall boundary

`iflagslen = .false.`

Turbulence model distance function closest boundary entity. (a negative sign indicates the node has been prescribed as laminar)

`hrles_blend = .false.`

HRLES blending function

`cdesdelta_des_length = .false.`

The maximum edge length incident to a vertex, $C_{DES}\Delta$ of Spalart et al. [35] A purely geometric LES length scale.

`dtilde_des_length = .false.`

DES length scale, $\tilde{d} = \min(d, C_{DES}\Delta)$ of Spalart et al. [35]

`rd_ddes_length = .false.`

An argument of the delayed DES blending function, $r_d = \frac{\tilde{\nu}}{\sqrt{U_{i,j}U_{i,j}}\kappa^2 d^2}$, which is an alternate form of equation (2.1) in Spalart et al. [52] suggested by the reference.

`fd_ddes_blend = .false.`

Delayed DES blending function, $f_d = 1 - \tanh\left([8r_d]^3\right)$, equation (2.2) of Spalart et al. [52]

`dtilde_ddes_length = .false.`

DDES length scale, $\tilde{d} = d - f_d \max(0, d - C_{DES}\Delta)$, equation (2.3) of Spalart et al. [52]

`vort_x_rms = .false.`

RMS-average of x-component of vorticity

`vort_y_rms = .false.`

RMS-average of y-component of vorticity

`vort_z_rms = .false.`

RMS-average of z-component of vorticity

`vort_mag_rms = .false.`

RMS-average of vorticity magnitude

`yplus = .false.`

Dimensionless wall distance, y^+

`cmu_star = .false.`

$k - \epsilon$ model turbulent length scale parameter

`mu_t_ratio = .false.`

Ratio of turbulent eddy viscosity to laminar (bulk) viscosity

`iib = .false.`

$-\text{trace}(B_{ij} * B_{ij})/2$

`iiib = .false.`

$\text{trace}(B_{ij} * B_{ij} * B_{ij})/3$

`uplus = .false.`

Dimensionless velocity, u^+

`kplus = .false.`

$\frac{k}{u_\tau^2}$

`wplus = .false.`

$\frac{\omega\nu}{u_\tau^2}$

`yplusretau = .false.`

$\frac{u^+}{re_\tau}$

`t11plus = .false.`

τ_{11}^+

`t12plus = .false.`

τ_{12}^+

`t13plus = .false.`

τ_{13}^{+}

`t22plus = .false.`

τ_{22}^{+}

`t23plus = .false.`

τ_{23}^{+}

`t33plus = .false.`

τ_{33}^{+}

`bird_breakdown = .false.`

Bird continuum breakdown parameter

`vgradrho = .false.`

$[u, v, w] \cdot \nabla \rho$

`f_r1 = .false.`

Curvature correction model function

`xi_k = .false.`

Cross-diffusion term for Wilcox k-ω 1998

`reconstruction_limiter_phi1 = .false.`

ϕ for the node-based reconstruction limiters (equation 1)

`reconstruction_limiter_phi2 = .false.`

ϕ for the node-based reconstruction limiters (equation 2)

`reconstruction_limiter_phi3 = .false.`

ϕ for the node-based reconstruction limiters (equation 3)

`reconstruction_limiter_phi4 = .false.`

ϕ for the node-based reconstruction limiters (equation 4)

`reconstruction_limiter_phi5 = .false.`

ϕ for the node-based reconstruction limiters (equation 5)

`s_modulus = .false.`

$|S| = \sqrt{2 S_{ij} S_{ji}}$

`w_modulus = .false.`

$|W| = \sqrt{2 \left| W_{ij} W_{ji} \right|}$

`vorticity_shell = .false.`

$\mu_t max(0, |S| - 2|W|)$

B.4.31 &sampling_parameters

This namelist specifies the types and frequency of sampling data to be exported for visualization. The output variables themselves are specified in the `&sampling_output_variables` namelist. The last dimension of each array references the geometry index, which is one to `number_of_geometries`.

```
&sampling_parameters
  number_of_geometries            = 0
  sampling_frequency(:)           = 0
  label(:)                        = ''
  type_of_geometry(:)             = 'none'
  crinkle                         = .false.
  nodal                           = .false.
  output_initial_state            = .false.
  plot(:)                         = 'tecplot'
  patch_list_count(:)             = 0
  patch_list(:)                   = ''
  type_of_data(:)                 = 'volume'
  move_with_body(:)               = ''
  boundary_list                   = ''
  default_boundary                = .true.
  plane_center(1:3,:)             = 0.0
  plane_normal(1:3,:)             = 0.0
  box_lower_corner(1:3,:)         = -1e+12
  box_upper_corner(1:3,:)         = 1e+12
  sphere_center(1:3,:)            = 0.0
  sphere_radius(:)                = 0.0
  circle_center(1:3,:)            = 0.0
  circle_normal(1:3,:)            = 0.0
  circle_radius(:)                = 0.0
  cylinder_face1(1:3,:)           = 0.0
  cylinder_face2(1:3,:)           = 0.0
  cylinder_radius(:)              = 0.0
  cone_face1(1:3,:)               = 0.0
  cone_face2(1:3,:)               = 0.0
  cone_radius1(:)                 = 0.0
  cone_radius2(:)                 = 0.0
  corner1(1:3,:)                  = 0.0
  corner2(1:3,:)                  = 0.0
  corner3(1:3,:)                  = 0.0
  corner4(1:3,:)                  = 0.0
  patch_symmetry(:)               = 1.0
  number_of_points(:)             = 0
  points(1:3,:,:)                 = 0.0
  p1_line(1:3,:)                  = 0.0
```

```
  p2_line(1:3,:)                    = 0.0
  schlieren_aspect                  = ''
  window_height(:)                  = 0.0
  window_width(:)                   = 0.0
  window_center(1:3,:)              = 0.0
  number_of_rows(:)                 = 0
  number_of_columns(:)              = 0
  model_center(1:3,:)               = 0.0
  plot_lines(:)                     = .false.
  make_shadow                       = .false.
  blanking_list_count(:)            = 0
  blanking_list(:)                  = ''
  isosurf_variable(:)               = 'p'
  isosurf_value(:)                  = 0.0
  isosurf_box(:)                    = .false.
  x_range_lower(:)                  = -1.0
  x_range_upper(:)                  = 1.0
  y_range_lower(:)                  = -1.0
  y_range_upper(:)                  = 1.0
  z_range_lower(:)                  = -1.0
  z_range_upper(:)                  = 1.0
  isosurf_dist_threshold(:)         = 0.0
  variable_list(:)                  = ''
  snap_output_xyz                   = .true.
  dist_tolerance                    = 1.0e-3
  fwh_formatted                     = .false.
  append_history(:)                 = .false.
  asynchronous_fwh                  = .false.
  boundary_point(1:3,:)             = 0.0
  boundary(:)                       = 0
  boundary_layer_edge_parameter(:) = 'enthalpy'
  boundary_layer_edge_value(:)      = 0.995
  boundary_layer_search_extent(:)   = 1.0e+6
  need_wall_data(:)                 = .false.
  reference_length                  = 0.0
/
```

`number_of_geometries = 0`

This is the total number of sampling geometries.

`sampling_frequency(:) = 0`

This specifies the iteration interval at which sampling is performed. The special value of `-1` means to only perform sampling at the end of a successful run.

`label(:) = ''`

This customizes the filename of sampling output. When it is blank, the file will be `[project_rootname]_tec_sampling_geomN.(dat,plt)` where `N` is the sampling geometry number, `.dat` is ASCII format, and `.plt` is binary format.

`type_of_geometry(:) = 'none'`

This is the type of sampling geometry,

`'streamsurface'` is a stream surface, requires `number_of_points` and `points`.

`'boundary_points'` for boundary point sampling, requires `number_of_points` and `points`, modified by `snap_output_xyz` and `dist_tolerance`.

`'volume_points'` for point sampling in the domain, requires `number_of_points` and `points`.

`'schlieren'` is a schlieren image via an integral of the refractive index field, requires `number_of_rows`, `number_of_columns`, `window_height`, `window_width`, `window_center`, and `schlieren_aspect`. It is controlled by `make_shadow` and `plot_lines`.

`'isosurface'` is an isosurface that requires `isosurf_variable` and `isosurf_value`. It is controlled by `*_range_lower` and `*_range_upper`.

`'box'` samples a the surface of a box. It requires `box_lower_corner` and `box_upper_corner`.

`'sphere'` samples a spherical surface. It requires `sphere_center` and `sphere_radius`.

`'cylinder'` samples a cylindrical surface. It requires `cylinder_face1`, `cylinder_face2`, and `cylinder_radius`.

`'cone'` samples a conic surface. It requires `cone_face1`, `cone_face2`, `cone_radius1`, and `cone_radius2`.

`'plane'` samples a plane. It requires `plane_center` and `plane_normal`.

`'quad'` samples a quadrilateral. It requires `corner1`, `corner2`, `corner3`, `corner4`, and `window_normal`.

`'circle'` samples a circle. It requires `circle_center`, `circle_normal`, and `circle_radius`.

`'line'` is line sampling, which requires `p1_line` and `p2_line`.

`'analyse_line'` traces a velocity profile from the boundary point in the normal direction off of the boundary surface. `analyse_line` additionally requires `boundary_layer_edge_parameter`, `boundary_layer_edge_value`, and `boundary_layer_search_extent`. A sample input for requesting a

boundary layer thickness parameters on boundary 6 at the surface point (0.589, -0.500, 0.258) using the criterion of 0.99 velocity edge and limiting the search to 5 grid units normal to the surface is given below.

```
type_of_geometry(1) = 'analyse_line'
boundary(1) = 6
boundary_layer_edge_parameter(1) = 'velocity'
boundary_layer_edge_value(1) = 0.99
boundary_layer_search_extent(1) = 5.0
boundary_point(:,1) = 0.589, -0.500, 0.258
sampling_frequency(1) = -1
```

'`analyse_boundary`' creates a full surface map (scatter plot) of boundary layer parameters. It requires `boundary`, `boundary_layer_edge_parameter`, `boundary_layer_edge_value`, and `boundary_layer_search_extent`. A sample input for requesting a boundary layer thickness parameters on boundary 2 using the criterion of 0.001 vorticity edge and limiting the search to 5 grid units normal to the surface is given below.

```
type_of_geometry(4) = 'analyse_boundary'
boundary(4) = 2
label(4) = 'vorticity_0z001'
boundary_layer_edge_parameter(4) = 'vorticity'
boundary_layer_edge_value(4) = 1.0e-3
boundary_layer_search_extent(4) = 5.0
sampling_frequency(4) = -1
```

'`mesh`' is requesting analysis of mesh quality. Requires in addition `type_of_data(geom_number)='mesh_statistics'`.

`crinkle = .false.`

This snaps the sampling surface to nearest grid faces instead of using linear interpolation.

`nodal = .false.`

This uses the nearest nodal values instead of interpolating.

`output_initial_state = .false.`

When `.true.`, this causes requested sampling data to be written for the initial state of the solution in the current run.

`plot(:) = 'tecplot'`

This is the format of sampling output,

'`tecplot`' Tecplot™ format.

'`fwh`' format for Ffowcs Williams-Hawkings analysis.

'serial_history' custom low-overhead point sampling format where all locations listed once at the top and then just the requested values per sampling_frequency.

patch_list_count(:) = 0

This is the number of patches in patch_list.

patch_list(:) = ''

A string list of patch face IDs to limit boundary survey to a subset of the boundary faces. Commas and dashes can be used to specify ranges, i.e., '1,2,5-7'.

type_of_data(:) = 'volume'

The source of data for extracting the requested sampling variables for each type_of_geometry.

'volume' extract data from the computational volume.

'boundary' extract data from a boundary.

'integrated' extract data from the computational volume and integrate over defined geometry.

move_with_body(:) = ''

Move the sampling geometry with the body if body is in motion. Use the fixed inertial reference frame when blank.

boundary_list = ''

List of patches to include when sampling boundaries; Commas and dashes can be used to specify ranges, i.e., '1,2,5-7'.

default_boundary = .true.

Use FUN3D default solid-wall-only boundary patches when sampling boundary points, i.e., ignore symmetry, slip, and flow-through boundaries.

plane_center(1:3,:) = 0.0

This is a point on a requested sampling 'plane'; it fixes the location.

plane_normal(1:3,:) = 0.0

This is a normal vector of sampling 'plane'; it fixes the orientation.

box_lower_corner(1:3,:) = -1e+12

This is the coordinate of the lower corner of a 'box'.

box_upper_corner(1:3,:) = 1e+12

This is the coordinate of the upper corner of a 'box'.

sphere_center(1:3,:) = 0.0

This is the coordinate of 'sphere' center; it fixes the location.

sphere_radius(:) = 0.0

This is the radius for 'sphere'; it fixes the size.

circle_center(1:3,:) = 0.0

This is the coordinate of center of a 'circle'; it fixes the location.

circle_normal(1:3,:) = 0.0

This is the normal vector for a 'circle'; it fixes the orientation.

circle_radius(:) = 0.0

This is the radius for a 'circle'; it fixes the size.

cylinder_face1(1:3,:) = 0.0

This is the coordinate for the center of the first face of a 'cylinder'.

cylinder_face2(1:3,:) = 0.0

This is the coordinate for center of the second face of a 'cylinder'.

cylinder_radius(:) = 0.0

This is the radius of a 'cylinder'.

cone_face1(1:3,:) = 0.0

This is the coordinate for center of the first face of a 'cylinder'.

cone_face2(1:3,:) = 0.0

This is the coordinate for center of the second face of a 'cylinder'.

cone_radius1(:) = 0.0

This is the radius of the first face of a 'cone'.

cone_radius2(:) = 0.0

This is the radius of the second face of a 'cone'.

corner1(1:3,:) = 0.0

This is the coordinate of the first corner of a 'quad'; the corners proceed clockwise.

`corner2(1:3,:) = 0.0`

The coordinate of the second corner of a `'quad'`.

`corner3(1:3,:) = 0.0`

The coordinate of the third corner of a `'quad'`.

`corner4(1:3,:) = 0.0`

The coordinate of the fourth corner of a `'quad'`.

`patch_symmetry(:) = 1.0`

When `type_of_data(:)= 'integrated'`, this option multiplies the computed integrand on a partial domain to represent the entire configuration. For example, 2.0 should be used to represent the whole configuration when simulating a model with half symmetry and 4.0 should be used to represent the whole configuration when simulating a model with quarter symmetry.

`number_of_points(:) = 0`

This is the number of points to be sampled by `'boundary_point'` or `'volume_point'`.

`points(1:3,:,:) = 0.0`

These are the coordinates of `boundary_point` and `volume_point` sampling. The first index is the Cartesian direction, the second index is the geometry, and the last index is the point in this geometry.

`p1_line(1:3,:) = 0.0`

This is the first end point of a line in `line` sampling.

`p2_line(1:3,:) = 0.0`

This is the second end point of a line in `line` sampling.

`schlieren_aspect = ''`

This is the Cartesian direction for `'schlieren'` view,

`'y'` Schlieren viewing along y axis.

`'z'` Schlieren viewing along z axis.

`'y1'` Schlieren viewing along y axis.

`'z1'` Schlieren viewing along z axis.

`''` Schlieren viewing along `window_normal`.

`window_height(:) = 0.0`

This is the window height for `'schlieren'`.

`window_width(:) = 0.0`

This is the window width for `'schlieren'`.

`window_center(1:3,:) = 0.0`

This is the window center for `'schlieren'`.

`number_of_rows(:) = 0`

This is the vertical number of pixels in the `'schlieren'` window.

`number_of_columns(:) = 0`

This is the horizontal number of pixels in the `'schlieren'` window.

`model_center(1:3,:) = 0.0`

This is the model center for `'schlieren'`.

`plot_lines(:) = .false.`

This plots lines for `'schlieren'`.

`make_shadow = .false.`

The boundary will cast a shadow in `schlieren` output.

`blanking_list_count(:) = 0`

This is the number of boundaries to search for `'schlieren'` boundary shadow.

`blanking_list(:) = ''`

This is a list of boundaries to search for `'schlieren'` shadow. Commas and dashes can be used to specify ranges, i.e., `'1,2,5-7'`.

`isosurf_variable(:) = 'p'`

This is the variable used to define the geometry of an `'isosurface'` and `isocrinkle`.

`'p'` Pressure.

`'rho'` Density.

`'u'` X-component of velocity.

`'v'` Y-component of velocity.

`'w'` Z-component of velocity.

`'vort_x'` X-component of vorticity.

`'vort_y'` Y-component of vorticity.

`'vort_z'` Z-component of vorticity.

`'vort_mag'` Total magnitude of vorticity vector.

‘`vort_mag_avg`’ Average total magnitude of vorticity vector.

‘`vort_mag_rms`’ RMS total magnitude of vorticity vector.

‘`q_criterion`’ Q-criterion.

‘`mach`’ Mach number.

‘`temperature`’ Temperature.

‘`p_tavg`’ Time average pressure.

‘`rho_tavg`’ Time average density.

‘`u_tavg`’ Time average x-component of velocity.

‘`v_tavg`’ Time average y-component of velocity.

‘`w_tavg`’ Time average z-component of velocity.

‘`p_trms`’ RMS of pressure.

‘`rho_trms`’ RMS of density.

‘`u_trms`’ RMS of the x-component of velocity.

‘`v_trms`’ RMS of the y-component of velocity.

‘`w_trms`’ RMS of the z-component of velocity.

‘`critical_d`’ critical d

‘`s1a`’ other option

‘`s1b`’ other option

‘`s1`’ other option

‘`s2`’ other option

‘`lambda1`’ Adjoint variable for the 1st governing equation.

‘`lambda2`’ Adjoint variable for the 2nd governing equation.

‘`lambda3`’ Adjoint variable for the 3rd governing equation.

‘`lambda4`’ Adjoint variable for the 4th governing equation.

‘`lambda5`’ Adjoint variable for the 5th governing equation.

‘`lambda6`’ Adjoint variable for the 6th governing equation.

‘`lambda7`’ Adjoint variable for the 7th governing equation.

‘`processor_id`’ The assigned processor ID.

‘`bird_breakdown`’ Bird breakdown factor.

‘`tt`’ Translational-rotational temperature in the generic gas path

‘`tv`’ Vibrational-electronic temperature in the generic gas path

‘`ttot`’ Total temperature

'species_????' Species density where ???? is the species name in file tdata

'mass_fr_????' Species mass fraction where ???? is the species name in file tdata

'mole_fr_????' Species mole fraction where ???? is the species name in file tdata

isosurf_value(:) = 0.0

This is the value of isosurf_variable(:) to create the 'isosurface' and isocrinkle geometry.

isosurf_box(:) = .false.

This clips the sampling geometry to be inside a box sized by *_range_* within isosurf_dist_threshold.

x_range_lower(:) = -1.0

This limits isosurface or isocrinkle when isosurf_box(:) = .true.

x_range_upper(:) = 1.0

This limits isosurface or isocrinkle when isosurf_box(:) = .true.

y_range_lower(:) = -1.0

This limits isosurface or isocrinkle when isosurf_box(:) = .true.

y_range_upper(:) = 1.0

This limits isosurface or isocrinkle when isosurf_box(:) = .true.

z_range_lower(:) = -1.0

This limits isosurface or isocrinkle when isosurf_box(:) = .true.

z_range_upper(:) = 1.0

This limits isosurface or isocrinkle when isosurf_box(:) = .true.

isosurf_dist_threshold(:) = 0.0

This trims portions of an isosurface or isocrinkle that have a distance to the surface less then this threshold. It requires isosurf_box(:) = .true.

variable_list(:) = ''

These variables augment &sampling_output_variables for this sampling object.

snap_output_xyz = .true.

This snaps the requested points to the nearest surface.

`dist_tolerance = 1.0e-3`

This is the tolerance used when `snap_output_xyz` is engaged.

`fwh_formatted = .false.`

Write Ffowcs Williams-Hawkings in Fortran unformatted format. The default is Fortran stream (C-binary).

`append_history(:) = .false.`

This option removes the step number from the filename and opens it with append.

`asynchronous_fwh = .false.`

This uses asynchronous I/O for permeable FWH output.

`boundary_point(1:3,:) = 0.0`

This defines the location on a boundary where the friction velocity is to be calculated for use in plotting data in wall units. Additional input that is required is `boundary(ib)`.

`boundary(:) = 0`

This defines the boundary on which `boundary_point(1:3,ib)` will be found. Also used with `type_of_geometry()='analyse_boundary'` to calculate the displacement and momentum thickness of the surface boundary layer.

`boundary_layer_edge_parameter(:) = 'enthalpy'`

This defines the physical parameter used to determine the edge of the boundary layer analysis. It is used in conjunction with `type_of_geometry()= 'analyse_boundary'`.

`'enthalpy'` Enthalpy.

`'velocity'` Velocity.

`'vorticity'` Vorticity.

`boundary_layer_edge_value(:) = 0.995`

This defines the value of the boundary layer edge parameter used for determining the boundary layer edge. It is used in conjunction with `type_of_geometry()='analyse_boundary'` in terms of the quantity specified by `boundary_layer_edge_parameter(ib)`.

`boundary_layer_search_extent(:) = 1.0e+6`

This defines the maximum boundary layer integration extent from the `boundary(:)` definition in grid units.

need_wall_data(:) = .false.

This option activates the calculation of the friction velocity at a point on a wall for plotting of data in wall units. Other required input would be boundary(ib) and boundary_point(:,ib). A sample asking for a boundary layer profile in wall units on boundary number 2 at the point (4., 0.05,0.) could have the following form:

```
&sampling_parameters
number_of_geometries = 1
type_of_geometry(1)  = 'line'
p1_line(:,1)         = 4.0,0.05,-10.
p2_line(:,1)         = 4.0,0.05, 10.
boundary(1)          = 2
boundary_point(:,1)  = 4.0,0.05,0.
need_wall_data(1)    = T
variable_list(1)='uplus,yplus,kplus,wplus'
sampling_frequency(1) = -1
/
```

reference_length = 0.0

This is the reference length for Re_τ used in &sampling_output_variables.

B.4.32 &spatial_avg

This feature is used to spatially average a time-accurate solution (i.e., from a DES simulation) of flow configurations with homogeneous directions. This option produces profiles of turbulence quantities and other desired output variables versus the wall normal coordinate. The averaging can be performed along one or two homogeneous directions. An underlying structured grid convention is used to specify details of the averaging location(s), where $\hat{k}$ is the spanwise, $\hat{i}$ is the streamwise, and $\hat{j}$ is the wall normal direction. The structured grid used as the averaging domain can be a Cartesian grid defined by the bounds in the namelist or a structured grid provided with a name to a file with a single-block grid in ASCII PLOT3D format.

```
&spatial_avg
  req_spatial_avg            = .false.
  domain_type                = 'box'
  struct_grid_file           = ''
  box_min_bound(1:3)         = 0.0
  box_max_bound(1:3)         = 0.0
  span_avg                   = .false.
  stream_avg                 = .false.
  spatial_avg_variable_list  = ''
  no_of_spanwise_locations   = -1
  no_of_streamwise_locations = -1
  streamwise_location(:)     = 0.0
  spanwise_location(:)       = 0.0
  ref_wall_bdry_index        = 0
/
```

`req_spatial_avg = .false.`

This enables FUN3D to perform spatial averaging of the results in one or two homogeneous directions.

`domain_type = 'box'`

This describes the type of the domain over which the averaging has to be performed. The in-built domain is a `'box'`. A structured `'grid'` file in PLOT3D format can be read for averaging over arbitrary planes and domain shapes with a file name of `struct_grid_file`.

`struct_grid_file = ''`

This is the name of the structured grid file stored in PLOT3D format, with `i` as the streamwise direction, `j` as the wall normal direction, and `k` as the spanwise direction. This file name is only used only when `domain_type = 'grid'`.

box_min_bound(1:3) = 0.0

This is the minimum value of each Cartesian coordinate of the bounding box of the spatial averaging domain. It is also used to control bounds on the grid when averaging is performed with `domain_type = 'grid'`.

box_max_bound(1:3) = 0.0

This is the maximum value of each Cartesian coordinate of the bounding box of the spatial averaging domain. It is also be used to control bounds on the grid when averaging is performed with `domain_type = 'grid'`.

span_avg = .false.

This option enables spatial averaging in the spanwise direction.

stream_avg = .false.

This option enables spatial averaging in the streamwise direction.

spatial_avg_variable_list = ''

This parameter is used to specify the variables which are required to be averaged. All the variables in the `&sampling_output_variables` namelist are also available here.

no_of_spanwise_locations = -1

This parameter is used to set the number of locations while performing spanwise averaging. The averaging is performed at equally spaced intervals between the `box_min_bound` and `box_min_bound`. When set to -1, it uses the grid lines as the basis for performing the averaging. When only streamwise averaging is required, the spanwise locations can be specified as well.

no_of_streamwise_locations = -1

This parameter is used to set the number of locations while performing streamwise averaging. The averaging is performed at equally spaced intervals between the `box_min_bound` and `box_min_bound`. When set to -1, it uses the grid lines as the basis for performing the averaging. When only spanwise averaging is required, the stream locations can be specified as well.

streamwise_location(:) = 0.0

This parameter is used to specify the coordinate of the streamwise locations at which spanwise averages are required. It is used when only spanwise averages are required at certain locations in streamwise direction.

`spanwise_location(:) = 0.0`

This parameter is used to specify the coordinate of the spanwise locations at which streamwise averages are required. It is used when only streamwise averages are required at certain locations in the spanwise direction.

`ref_wall_bdry_index = 0`

This is the boundary index of the wall which is to be used as reference, while computing average wall related quantities such as `u+`, `y+`. The average value of `u_tau` is also printed in the output.

B.4.33 &slice_data

This namelist specifies boundary slices for visualization and to obtain loads. Output frequency is controlled by `slice_freq` in the `&global` namelist, where zero for no output, `-1` for output at the end of run, and a positive integer for periodic output.

This is a limited ability to take slices through **boundary surfaces**. For example, spanwise cuts along a wing may be extracted, and then the resulting pressure and skin friction data may be plotted at each station.

Slices can only be specified (input) as Cartesian planes (e.g., constant y). In some cases, slices may be desired on planes that are not Cartesian planes. For example, slices may be desired normal to the quarter chord of a swept wing. To accommodate this type of situation, the user may input a 'custom transform' matrix that takes the grid boundaries on which slices are desired, and maps them into a coordinate system in which slice planes *are* Cartesian planes. For moving-body cases, slices are specified as Cartesian planes in the grid at $t = 0$, which define a set of body-fixed slices. A 'custom transform' may be supplied in the case where the desired slices on the grid at $t = 0$ do not align with a Cartesian plane. As the body moves in time these slices move with the body. Each slice will be written as one or more zones (loops) in an ASCII formatted Tecplot™ file with the naming convention:

```
[project_rootname]_slice.dat
```

The variables output to this file are: `x`, `y`, `z`, `cp`, `cfx`, `cfy`, and `cfz` at each output time step. These slicing output variables are not customizable by the user.

Slicing occurs in the inertial frame, unless an alternate reference frame is specified. For stationary geometries, the inertial frame is the only option. For moving body cases, either the frame of one of the moving bodies or an observer frame may specified.

When slicing boundary surfaces, a file called `slice.info` is output that echos much of the input data. When the slicing is successful, the file will also contain information about the number of points in the slice.

Below, namelist variables are defined. See section B.4.33 for some important considerations when using this capability. Note that the concepts of chord, leading edge, trailing edge, etc are only applicable to geometries that are topologically similar to wings and airfoils. Slicing can still be performed on other types of geometries in order to extract sectional data, but the resulting integrated sectional forces projected onto the chord, normal and span directions will likely be meaningless.

```
&slice_data
  nslices                  = 0
  replicate_all_bodies     = .false.
```

```
  output_initial_state      = .false.
  slice_append_on_restart   = .true.
  slice_x(:)                = .false.
  slice_y(:)                = .true.
  slice_z(:)                = .false.
  slice_location(:)         = 0.0
  slice_increment           = 0.0
  coordinate_shift          = epsilon(1.0)
  debug_xyz_to_slice        = .false.
  debug_slice_to_xyz        = .false.
  debug_le_locations        = .false.
  debug_te_locations        = .false.
  xx_box_max(:)             = huge(1.0)
  yy_box_max(:)             = huge(1.0)
  zz_box_max(:)             = huge(1.0)
  xx_box_min(:)             = -huge(1.0)
  yy_box_min(:)             = -huge(1.0)
  zz_box_min(:)             = -huge(1.0)
  slice_xmc(:)              = huge(1.0)
  slice_ymc(:)              = huge(1.0)
  slice_zmc(:)              = huge(1.0)
  n_bndrys_to_slice(:)      = 0
  bndrys_to_slice(:,:)      = 0
  slice_frame(:)            = ''
  slice_group(:)            = 1
  chord_dir(:)              = 1
  te_def(:)                 = 1
  le_def(:)                 = 30
  corner_angle(:)           = 120.0
  use_local_chord           = .true.
  tecplot_slice_output      = .true.
  slice_output_frame        = ''
  output_sectional_forces   = .true.
  slice_initial_coords      = .false.
  pitch_plane_normal(1,1:3) = 0.0, 0.0, 1.0
  compute_solidity          = .false.
  nblades                   = -1
  rotor_radius              = -1.0
  custom_transform(1,1,1:4) = 1.0, 0.0, 0.0, 0.0
  custom_transform(1,2,1:4) = 0.0, 1.0, 0.0, 0.0
  custom_transform(1,3,1:4) = 0.0, 0.0, 1.0, 0.0
  custom_transform(1,4,1:4) = 0.0, 0.0, 0.0, 1.0
  output_in_slice_coords(:) = .false.
/
```

`nslices = 0`

This is the number of slices to create. If negative, then data for only one slice station need be input, along with `slice_increment`, and all the data specified for the first station will be applied to subsequent stations, with the exception of the slice location, which will be set using the slice increment between stations.

`replicate_all_bodies = .false.`

This will set similar slice stations on multiple bodies with minimal input beyond that required for slicing the first body. This is particularly useful for rotorcraft applications where multiple blades are to be sliced. This variable duplicates the input slice info for all moving bodies, with the exception of the `slice_frame` and the `bndrys_to_slice`.

`output_initial_state = .false.`

When `.true.`, this causes requested slice data to be written for the initial state of the solution in the current run.

`slice_append_on_restart = .true.`

When `.true.`, this appends to the existing slicing-related output files when restarting; when `.false.`, this removes the existing slicing-related output files at startup and new ones are created for the current execution. Slicing-related output files are the `[project_rootname]_slice.dat` file and the `[project_rootname].sectional_forces` file.

`slice_x(:) = .false.`

This extracts the slice at $x =$ `slice_location` in the specified reference frame.

`slice_y(:) = .true.`

This extracts the slice at $y =$ `slice_location` in the specified reference frame.

`slice_z(:) = .false.`

This extracts the slice at $z =$ `slice_location` in the specified reference frame.

`slice_location(:) = 0.0`

This is the coordinate value at which slice is taken.

`slice_increment = 0.0`

When `nslices` is negative, this is the increment in slice coordinate between consecutive slice stations. Unused if `nslices` is positive.

`coordinate_shift = epsilon(1.0)`

This is the surface point coordinate shift used if the `slice_location` happens to fall within machine zero of a surface point. Note that the surface point is temporarily shifted by −`coordinate_shift`, so in some instances a negative value of `coordinate_shift` may be needed if the problem point is on the inboard side of a geometry feature.

`debug_xyz_to_slice = .false.`

This triggers Tecplot™ output of the boundary surfaces selected for slicing in both the original, input grid position, as well in the transformed position corresponding to any 'custom transforms'. This output can be useful for verifying that a user-supplied custom transform is correct. Output files are named as `slice_surface_n.dat` for boundary surface `n` in the original position, and `slice_surface_100+n.dat` for boundary surface `n` in the transformed position. Intended primarily for developer use.

`debug_slice_to_xyz = .false.`

This triggers Tecplot™ output of the boundary surfaces selected for slicing in both the original, input grid position, as well as the the corresponding surfaces after they are transformed back from the slicing frame to current grid position. Output files are named as `slice_surface_200+n.dat` for boundary surface `n` in the original grid position, and `slice_surface_300+n.dat` for boundary surface `n` after it is transformed back to the original orientation. Intended primarily for developer use.

`debug_le_locations = .false.`

This triggers Tecplot™ output that may be useful in sorting out issues with the determination of the leading edge. Two files are output - the first contains the collection of points that will be examined to determine the leading edge location, and is named `debug_le_candidates.dat`. The second file contains the computed location of the leading edge, and is named `debug_le_locations.dat`. In both files there is a separate zone for each slice location. It is recommended that `debug_le_locations` be used together with `debug_xyz_to_slice`, so that the computed leading edge locations can be plotted as scatter points on top of the surface mesh(es) that result from `debug_xyz_to_slice`. The allows the user to assess whether the trailing edge points were correctly determined. The candidate points may also be plotted as scatter points on the surface meshes; obviously if the candidate points are incorrect or inadequate, then the leading edge point cannot be correctly computed. Finally, if used with `debug_xyz_to_slice`, note that two series of files are output from that option; for purposes of leading edge assessment, use the set of files whose names contain numbers greater than 100.

`debug_te_locations = .false.`

This triggers Tecplot™ output that may be useful in sorting out issues with the determination of the trailing edge. Use this option in the same manner as described for `debug_le_locations.dat`.

`xx_box_max(:) = huge(1.0)`

This is the maximum x-coordinate used to define a bounding box to constrain the slicing to filter unwanted intersections.

`yy_box_max(:) = huge(1.0)`

This is the maximum y-coordinate used to define a bounding box to constrain the slicing to filter unwanted intersections.

`zz_box_max(:) = huge(1.0)`

This is the maximum z-coordinate used to define a bounding box to constrain the slicing to filter unwanted intersections.

`xx_box_min(:) = -huge(1.0)`

This is the minimum x-coordinate used to define a bounding box to constrain the slicing to filter unwanted intersections.

`yy_box_min(:) = -huge(1.0)`

This is the minimum y-coordinate used to define a bounding box to constrain the slicing to filter unwanted intersections.

`zz_box_min(:) = -huge(1.0)`

This is the minimum z-coordinate used to define a bounding box to constrain the slicing to filter unwanted intersections.

`slice_xmc(:) = huge(1.0)`

This is the x-coordinate of the moment center, in the specified reference frame, for aerodynamic moments acting on the slice. The default value will result in the moment center being taken as the computed quarter chord of the slice.

`slice_ymc(:) = huge(1.0)`

This is the y-coordinate of the moment center, in the specified reference frame, for aerodynamic moments acting on the slice. The default value will result in the moment center being taken as the computed quarter chord of the slice.

`slice_zmc(:) = huge(1.0)`

This is the z-coordinate of the moment center, in the specified reference frame, for aerodynamic moments acting on the slice. The default value

will result in the moment center being taken as the computed quarter chord of the slice.

`n_bndrys_to_slice(:) = 0`

This is the number of candidate boundaries to search while computing slice-plane intersections. The index is the slice. By default, all solid boundaries will be searched. Specifying which boundaries are candidates for slicing may speed up the slicing process and can be used to filter out unwanted intersections or to slice non-solid boundaries.

`bndrys_to_slice(:,:) = 0`

This is the list of `n_bndrys_to_slice` boundaries, when the variable `n_bndrys_to_slice` is greater than zero. The first index is the slice and the second index is the boundary.

`slice_frame(:) = ''`

This is the name of a reference frame to associate with the slice. Blank indicates the inertial frame, and is the only valid choice for slicing stationary boundaries. For slicing boundaries of moving bodies, the slice frame should be specified as the `body_name` entered in the `&body_definitions` namelist.

`slice_group(:) = 1`

This assigns this slice to a particular group number. Within a group, slice locations must be given in ascending order.

`chord_dir(:) = 1`

This is the direction of local chord relative to the direction from leading edge to trailing edge, in the slice plane. The value 1 indicates local chord in direction from leading edge to trailing edge. The value -1 indicates local chord in direction from trailing edge to leading edge. Determination of the leading and trailing edges is described below.

`te_def(:) = 1`

This is the number of points or line segments to consider when defining the trailing edge of the slice (see Fig. B2). A value of 1 defines the trailing edge as the aft-most point. This is best for sharp trailing edges. A value of `te_def` > 1 initiates a search over the aft-most `te_def` segments for corners, after which the trailing edge is taken as the average coordinate over all the detected corners. Two corners are assumed to be the desired number, and warnings are output if only one or more than two are found. The value of `te_def` must be chosen judiciously. It should be large enough to allow both corners to be found but not so large as to cause excessive searching or for any non-trailing edge corners to be found. A

value greater than one is best for, and recommended only for, squared-off trailing edges. A negative number indicates a parabolic fit of the aft-most abs(`te_def`) points, which may be best for rounded or blunted trailing edges. However, the parabolic-fit option entails extra work, which may be a consideration for time-dependent cases with many slices, such as coupled CFD/CSD rotorcraft cases

`le_def(:) = 30`

This is the number of points to consider when defining the leading edge of the slice (see Fig. B3). A value of 1 defines the leading edge as the forward-most point. Use this if nothing else works or for special cases. A value of `le_def` > 1 indicates a search over the forward-most `le_def` points for the one that has the maximum distance from the previously determined trailing edge. A value of `le_def` > 1 is generally the best choice provided that the trailing edge can be accurately located. A negative number indicates a parabolic fit over the forward-most abs(`le_def`) points. This option may be useful for poorly defined leading edges. However, the parabolic-fit option entails extra work, which may be a consideration for time-dependent cases with many slices, such as coupled CFD/CSD rotorcraft cases

`corner_angle(:) = 120.0`

This is used in conjunction with a `te_def` greater than 1. Angles between adjacent sliced segments that are less than `corner_angle` degrees will be considered a corner between the two segments. For squared-off trailing edges, two and only two corners should be detected; warnings are output if only one or more than two are found.

`use_local_chord = .true.`

Use the computed local (sectional) chord based on the computed leading edge and trailing edge locations to normalize the sectional force and moment data. When `.false.`, the value of `x_moment_length` in `&force_moment_integ_properties` will be used instead of the locally computed chord.

`tecplot_slice_output = .true.`

This outputs the sliced data to a formatted Tecplot™ file that is named `[project_rootname]_slice.dat`. This file can become very large for unsteady flows with frequently written data at many slice locations.

`slice_output_frame = ''`

This is the reference frame in which slice data is output when Tecplot™ output is requested (replaces obsolete `output_in_slice_coords`).

`''` slice data output in the inertial frame

`'slice_frame'` slice data output the frame that was associated with the slice.

`'blade_frame'` slice data output in the rotor blade frame *valid only if* `overset_rotor = .true.`

`'custom_frame'` slice data output in the frame specified via the optional `custom_transform`

`'observer'` slice data output in the observer frame (only for `moving_grid = .true.`)

`output_sectional_forces = .true.`

This outputs detailed force and moment data for each slice to a formatted file, `[project_rootname].sectional_forces`. This file contains force and moment data, like that in the `[project_rootname].forces` file, for each and every slice. In addition, it contains geometrical data for each slice (leading and trailing edge coordinates, moment center, etc.) This file can become very large for unsteady flows with frequently written data at many slice locations. The data in the file, especially the geometry data, can be useful to assess whether the slicing is working as expected.

`slice_initial_coords = .false.`

Obsolete; current slicing algorithm evaluates interpolation coefficients only once at the start of the computation based on the initial mesh. It is included for backwards compatibility with fun3d.nml files, but may be removed in a future version.

`pitch_plane_normal(1,1:3) = 0.0, 0.0, 1.0`

This is the unit normal to the plane from which the geometric pitch angle is measured. For articulated rotor cases (`overset_rotor = .true.`), `pitch_plane_normal` is automatically taken as a unit vector along the rotor shaft.

`compute_solidity = .false.`

This compute the (thrust weighted) rotor solidity from the sliced geometry.

`nblades = -1`

This is the number of blades to use when computing rotor solidity; note: a positive number should be used only when `overset_rotor = .false.` When `overset_rotor = .true.`, `blades` is set automatically based on rotor-specific input from `rotor.input`.

`rotor_radius = -1.0`

This is the rotor radius to use when computing rotor solidity; note: a positive number should be used only when `overset_rotor = .false`. When `overset_rotor = .true.`, `rotor_radius` is set automatically based on rotor-specific input from `rotor.input`.

`custom_transform(1,1,1:4) = 1.0, 0.0, 0.0, 0.0`

This is a user-specified 4x4 transform matrix to allow slicing in a custom coordinate system in which slice planes are Cartesian planes. Note: `custom_transform` is compatible only with non-moving grids at present. The transform matrix is specified as a mapping that takes coordinates *from* the input grid and maps them *to* the "slice" coordinate system in which slicing is performed on a Cartesian plane.

`output_in_slice_coords(:) = .false.`

Obsolete - specify `slice_output_frame` instead It is included for backwards compatibility with fun3d.nml files, but may be removed in a future version.

Important Considerations for Determination of Leading And Trailing Edges Determining the locations of airfoil leading and trailing edges is especially important for rotorcraft applications where airloads are usually examined (and provided to a CSD code, if applicable), in an airfoil section-aligned coordinate system. The leading and trailing edge points determine the orientation of this section aligned coordinate system. In the section-aligned system, the local x coordinate is aligned with the local chord, positive in the direction from the leading edge to the trailing edge. The local span direction is defined by the moment centers at the `slice_location` points, positive in the direction of increasing `slice_location`. The local normal direction is defined as the cross product of the local chord vector and local span vector. When slicing boundary data, the computed forces are computed in both the selected frame of reference (see `slice_frame`) and in an airfoil section aligned system. If the data in the section-aligned system is irrelevant to you, then you do not need to worry about choosing the detection parameters carefully; the default values should be reasonable. However, if resolution of forces and moments into a section-aligned system is important to you, then there are a number of things that should be considered:

1. Make sure the chord direction `chord_dir` is correct; the default is that going from the leading edge to the trailing edge is the same as traveling in the positive "chordwise" coordinate direction. For most applications this is the usual situation; however, the convention for rotorcraft applications is the opposite, requiring `chord_dir = -1`.

2. Since the best option for determining the leading edge (`le_def` > 1) uses the trailing edge location, care should be taken to get the trailing edge correct. For *sharp* trailing edges, this is very simple since the default of `te_def = 1` (i.e., use the aft-most point) is the best option. However, smoothly blunted or squared-off trailing edges are more difficult. When the boundary surface of an unstructured mesh is sliced, the resulting section will be comprised of line segments determined by the intersection of the specified plane and the edges of the surface triangles. These segments and the points that make up the segments will not usually be the same as the surface points; typically there are more segments and points arising from intersected triangles, as illustrated in Fig. B1. This greater point count should influence the selection of `te_def` and `le_def` values. You will need enough segments (`te_def` and `le_def`) to ensure that both corners are detected, but not so many that other, non trailing-edge corners (if present) are detected. Another parameter that may be of use to aid in the detection of corners is the `corner_angle`; corners with angles larger than `corner_angle` between adjacent segments will require a larger value of `corner_angle` for detection.

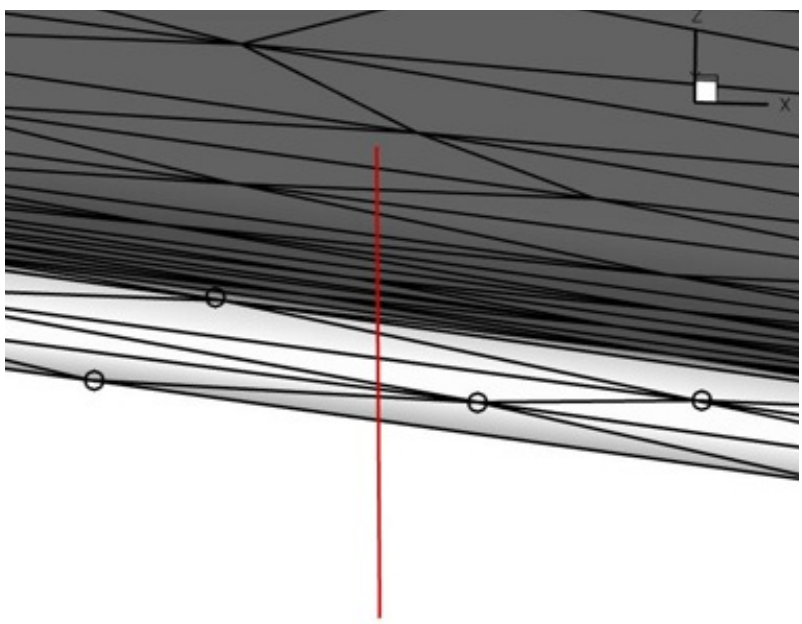

Figure B1: View looking upstream from the trailing edge of a rotor blade mesh; the light-colored region is the squared-off trailing edge; the red line shows the location where an x=constant slice will be taken; black circles indicate surface grid points on the trailing edge.

The resulting section corresponding to the slice depicted in Fig. B1 is shown in Fig. B2, where the view is zoomed in to the trailing edge region. The aft-most 8 segments (of the approximately 30 segments in this view) are shown in red. The computed trailing edge locations using two different `te_def` values are shown. The minimum `te_def` value at this particular station to pick up both corners would be 8, but a value of 20 was used in case another slice required more segments. If the blade was pitched downward rather than upward, then the point chosen by `te_def = 1` would be the lower corner, rather than the upper corner as shown.

3. Smoothly-blunted (rounded) trailing edges should be done with either `te_def = 1` (aft-most point) or via a parabolic fit of the aft-most abs(`te_def`) points; the latter option is probably better in general but will require some experimentation for the particular case at hand to choose the optimal number of points over which to fit the parabola.

4. The leading edge is typically easier to determine, if a good trailing edge position has already been found. The default value of `le_def = 30` (search the 30 forward-most points for the one with the greatest distance from the trailing edge location) should do a decent job for most

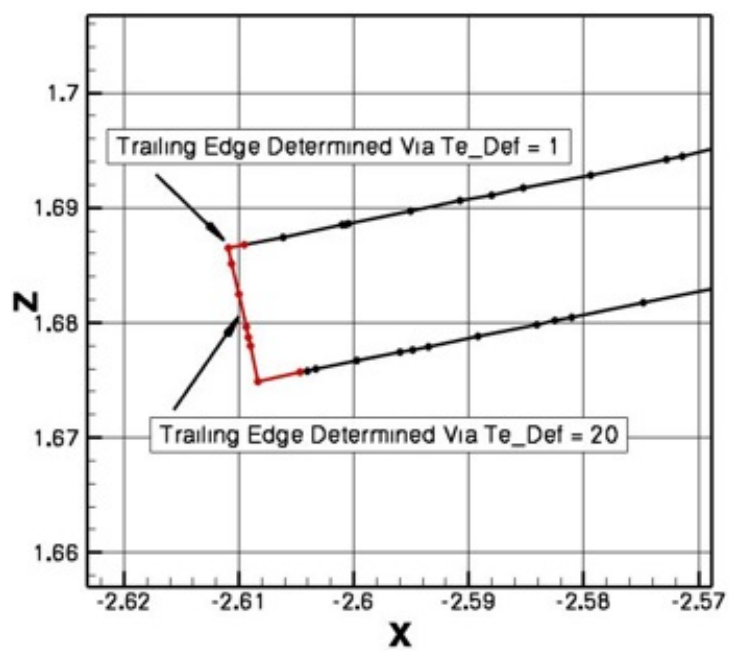

Figure B2: Sliced section corresponding to Fig. B1; zoomed in to the trailing edge region.

cases.

Figure B3 shows a sliced section, zoomed in to the leading edge region. The forward-most 20 segments (of the approximately 30 segments in this view) are shown in red. The computed leading edge locations using two different `le_def` values are shown. In this case, both results are fairly close but `le_def = 30` has picked out the true leading edge (as judged from the leading edge geometry at zero pitch angle).

5. The leading edge and trailing edge detection schemes can be somewhat sensitive to the input choices. For cases that rely on accurate resolution of forces and moments into section-aligned coordinates (e.g., rotorcraft), it is strongly recommended to spend some time up front to make sure that things are coming out as expected. To do this, inspect the `[project_rootname].sectional_forces` file for a particular slice station; at each station the computed leading and trailing edge coordinates will be output. Plot the corresponding station from the `[project_rootname]_slice.dat`, as done above, and make sure the computed coordinates are the correct ones. If many stations are sliced, it is impractical to inspect all of them in this manner, but it is good practice to spot check at least a few stations. For moving-geometry cases, try first running the case with `body_motion_only = .true.` in the

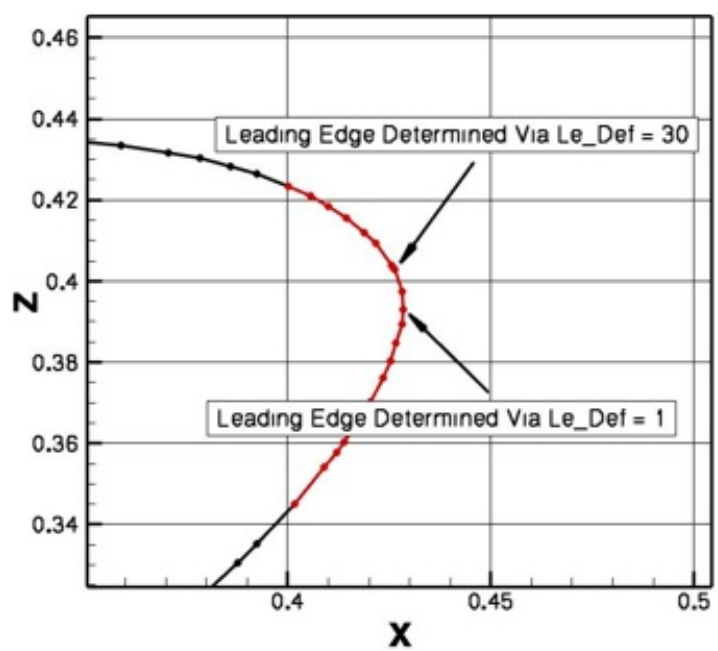

Figure B3: A sliced section, zoomed in to the leading edge region.

&global namelist. This will allow output of the [project_rootname].sectional_forces and [project_rootname]_slice.dat files without the expense of a flow solve or mesh deformation; for spot checking you may want to have the slicing done infrequently, perhaps using fewer stations than ultimately desired, as these output files can be huge.

6. While the [project_rootname].sectional_forces can be useful for spot checking, the data in the file is not in a format that is amenable to plotting. The FUN3D distribution utils/Rotorcraft directory contains a utility code that will read in both the files slice.info and [project_rootname].sectional_forces to output Tecplot™ files, for each slice group, containing force and moment data in the section-aligned coordinate system, as well as geometry data (leading edge, trailing edge, quarter-chord coordinates, and pitch angle).

7. After making sure that the leading edge and trailing edge positions are being computed correctly, you may want to turn off one or both of the [project_rootname].sectional_forces and [project_rootname]_slice.dat files unless needed. For instance, in rotorcraft applications with coupling to external CSD codes, although the blade boundary surfaces must be sliced to generate the aerodynamic loads data for the CSD code, this information is actually passed to the CSD code by another file; the [project_rootname].sectional_forces and [project_rootname]_slice.dat files are not used.

8. Although the slicing process will work for multi-element airfoils, at this time the computation of the leading edge and trailing edge is only done for the entire section, not each element individually.

B.4.34 &overset_data

This namelist specifies information for overset grid simulations. The overset option may be used with either static or dynamic meshes. In either case, an initial overset connectivity file, corresponding to the configuration at t=0, must be provided. Connectivity files must be in the SUGGAR++ 'dci' format, or, if using the `dci_io` option (see below), in the FUN3D 'dcif' format. A conversion utility (`utils/dci_to_dcif`) is provided to convert from the dci format to the dcif format. The initial overset connectivity file must be named `[project].dci` (or `[project].dcif` if using the `dci_io` option). For dynamic meshes, the user may elect to provide precomputed connectivity files for each time step, in which case the files must be named `[project]1.dci` for time step 1 at t=Δt, `[project]2.dci` for time step 2 at t=2Δt, and so on. The naming convention is the same when using the `dci_io` option, except the file extension is `.dcif` rather than `.dci`.

```
&overset_data
  overset_flag       = .false.
  dci_on_the_fly     = .false.
  dci_period         = huge(1)
  reset_dci_period   = .false.
  dci_freq           = 1
  dci_dir            = '.'
  reuse_existing_dci = .false.
  skip_dci_output    = .false.
  dci_io             = .false.
  dci_io_nproc       = 1
/
```

`overset_flag = .false.`

When `.true.`, overset mesh capability is enabled.

`dci_on_the_fly = .false.`

This controls whether overset connectivity is computed as the grid moves, or whether overset connectivity has been pre-computed for each grid position and is available to read in. Ignored if `overset_flag = .false.` and `overset_rotor = .false.` in the `&rotor_data` namelist.

`dci_period = huge(1)`

This controls the period (in terms of timesteps) at which the dci counter is reset. At time step `dci_period+1`, the flow solver will read overset data from the dci file `[project]1.dci`, corresponding to time step 1 at t=Δt. (Note: if `dci_io = .true.`, the corresponding file name would be `[project]1.dcif`). For example, if the simulation involves rotation through 360 degrees with a time step corresponding to 1 degree per

step, set `dci_period = 360`, and, if the user is providing precomputed dci files, the final one provided would be named `[project]360.dci` and would correspond to the 360 degree position. If instead the same 360 degree rotation was run with 0.5 degrees per step, set `dci_period = 720` and the final dci file would be `[project]720.dci`, again corresponding to the 360 degree position. When using the `dci_on_the_fly` option, connectivity files are computed and written for the first `dci_period` timesteps, after which the code begins reading and reusing the connectivity files. The default value implies that the motion is not periodic and therefore the dci counter is never reset. Ignored if `overset_flag = .false.` and `overset_rotor = .false.` in the `&rotor_data` namelist.

`reset_dci_period = .false.`

When `.true.`, allows `dci_period` to be reset to a different value for restarting with a different time step.

`dci_freq = 1`

This controls how frequently the dci data is updated, either by computation within the flow solver, or by reading a new dci file. Dci data is updated every `dci_freq` time steps.

`dci_dir = '.'`

This is the directory where dci files are located. Note: A trailing forward slash (/) is automatically added and should not be included in the directory name.

`reuse_existing_dci = .false.`

When `.true.`, allows the computation of dci data to be skipped if a dci file for the current time step already exists. This option is typically used in conjunction with `dci_period`, so that dci files are computed on the fly for the first `dci_period` time steps, and then files are reused for all subsequent periods of grid motion, without having to change `dci_on_the_fly` in between. Ignored if `dci_on_the_fly = .false.`.

`skip_dci_output = .false.`

When `.true.`, the solver will not save the dci data to a file. Ignored if `dci_on_the_fly = .false.`.

`dci_io = .false.`

When `.true.`, dci files are read from disk with a dedicated rank (processor) to help mask communication with computation.

`dci_io_nproc = 1`

When `dci_io = .true.`, this specifies the number of ranks to use for loading of dci files.

B.4.35 &rotor_data

This namelist controls high-level rotor simulation settings. Eventually, this namelist may subsume `rotor.input`.

```
&rotor_data
  comprehensive_rotor_coupling = 'none'
  niters_cfd(1,1:2)            = 360, 180
  overset_rotor                = .false.
  solidity_evaluation          = 'rectangular_blade'
  solidity(:)                  = -1.0
  output_rotor_performance     = .false.
  output_comprehensive_loads   = .false.
/
```

`comprehensive_rotor_coupling = 'none'`

This controls whether the code is to be coupled to a rotorcraft comprehensive code, and if so, which one. Note: with one exception, coupling requires that additional data be set in the `&slice_data` namelist to define and extract the sectional aerodynamic loads that are passed to the comprehensive code.

`'none'` not coupled.

`'camrad'` loosely coupled to CAMRAD-II.

`'helios'` coupled into the CREATE-AV/Helios rotorcraft simulation framework as a near-body solver; `&slice_data` input not required but may be set if desired to extract sectional airloads for postprocessing.

`'rcas'` loosely coupled to RCAS.

`'rcas_tight'` tightly coupled to RCAS.

`'dymore'` loosely coupled to DYMORE.

`'dymore_tight'` tightly coupled to DYMORE.

`niters_cfd(1,1:2) = 360, 180`

This flag pertains only to loose coupling with RCAS and DYMORE. `niters_cfd(rotor_index,1)` controls the number of CFD time steps to perform before the first loose coupling data interchange with the comprehensive code for `rotor_index`; `niters_cfd(rotor_index,2)` controls the number of CFD time steps taken between subsequent data interchanges for `rotor_index`. Each rotor may have different interchange controls, with the first index of the `niters_cfd` array indicating the rotor number. The number of steps should be multiples of 360 divided by the number of blades on the particular rotor.

`overset_rotor = .false.`

This controls whether overset meshes are used for moving rotor simulations. When `.true.`, the rotor motion is governed by the `rotor.input` file.

`solidity_evaluation = 'rectangular_blade'`

This controls how the rotor solidity, σ, is evaluated. Solidity is used for the rotor performance measures that are output.

`'specified'` User specifies the value of solidity for each rotor.

`'compute'` Solidity is evaluated via 'slicing' of the blade surface into segments and integrating over the segments. The same segments defined in the `&slice_data` namelist for sectional loads extraction are used for the evaluation of solidity. The method computes the thrust-weighted solidity using an effective blade chord; $\sigma = \frac{nblades\ R\ C_{eff}}{\pi\ R^2}$, where C_{eff} is the (thrust-weighted) effective blade chord computed by integrating the surface slices, $nblades$ is the number of blades, and R is the rotor radius, the last two as specified in the `rotor.input` file.

`'rectangular_blade'` Solidity is evaluated by assuming the rotor blades have a rectangular planform; $\sigma = \frac{nblades\ R\ chord}{\pi\ R^2}$, where $nblades$ is the number of blades, R is the rotor radius, and $chord$ is the blade chord, all as specified in the `rotor.input` file.

`solidity(:) = -1.0`

This is the user-supplied value for rotor solidity; only used when `solidity_evaluation = 'specified'`.

`output_rotor_performance = .false.`

This flag turns on evaluation and output of rotor performance metrics such and thrust, torque, power (dimensional and coefficient). This flag will automatically be set to true when `overset_rotor = .true`. Requires the case be run with moving grids, not with actuator disc or non-inertial options.

`output_comprehensive_loads = .false.`

This flag turns on evaluation and output of rotor blade sectional airloads, primarily to enable coupling with a rotorcraft comprehensive code. However, even without comprehensive code coupling, this data may be of interest for rigid-blade analysis. This flag will automatically be set to true when `overset_rotor = .true`. This option requires the specification of `&slice_data` to define stations at which airloads are extracted.

B.4.36 &adapt_metric_construction

This namelist controls how the metric is formed for metric-based mesh adaptation. More details on grid adaptation can be obtained in section 8. The metric is either feature-based or output-based and is constructed through a common framework.

For a feature-based metric, `adapt_feature_scalar_key` specifies the scalar field S. See the description of `adapt_feature_scalar_key` for a list of available options. The intensity I at each node is constructed from S at each node with the `adapt_feature_scalar_form` method applied across each incident edge. See the description of `adapt_feature_scalar_form` for a list of available edge operators and how they are gathered to the nodes. The feature-based isotropic scaling of the grid is h/h_0,

$$\frac{h}{h_0} = \min\left(\left(\frac{I}{T}\right)^{-\omega}, g\right), \tag{B1}$$

where T is the `adapt_output_tolerance`, ω is the `adapt_exponent`, and g is the `adapt_max_edge_growth`. For feature-based adaptation, the setting `adapt_output_tolerance` is chosen to scale I, and its value will depend of the choice of `adapt_feature_scalar_key` and `adapt_feature_scalar_form`. Trial and error is required to determine an `adapt_output_tolerance` (T) setting that scales I to be greater than one in regions that have the features that require grid refinement. Therefore, it is case specific.

For an output-based metric, the intensity is given as

$$I = \frac{1}{2}\sum_{i=1}^{5}\left\{\left|[R^{\lambda}(\hat{\lambda})]_{i,\kappa}[\hat{Q}-\bar{Q}]_{i,\kappa}\right| + \left|[\hat{\lambda}-\bar{\lambda}]_{i,\kappa}[R(\hat{Q})]_{i,\kappa}\right|\right\}, \tag{B2}$$

where R is the flow residual, R^{λ} is the adjoint residual, Q is the flow solution, λ is the adjoint solution, the $\hat{}$ accent is a high-order reconstruction or interpolation, and the $\bar{}$ accent is a linear reconstruction or interpolation. Reconstruction or interpolation is selected with `adapt_error_estimation`. See Park [31] for details. The output-based isotropic scaling of the grid is h/h_0,

$$\frac{h}{h_0} = \max\left(\min\left(\left(\frac{I}{T}\right)^{-\omega}, g\right), 1/g\right), \tag{B3}$$

where ω is the `adapt_exponent` and g is the `adapt_max_edge_growth`. T is the `adapt_output_tolerance` divided by the number of nodes when it is positive. When `adapt_output_tolerance` is negative, T is `-adapt_output_tolerance` times the average or median I based on `adapt_statistics`.

The anisotropic feature-based and output-based metrics are constructed from h/h_0 in the same manner. The `adapt_hessian_method` is applied to the

adapt_hessian_key scalar field to compute the Hessian H. The symmetric H is decomposed into eigenvalues Λ and eigenvectors X. The eigenvectors of H form the eigenvectors of the metric M, which are also the principle directions of M. The eigenvalues of M are related to the spacing in each of the principle directions by $\Lambda = 1/h^2$, which start as the absolute value of the eigenvalues of H,

$$M = X \begin{bmatrix} |\Lambda_1| & & \\ & |\Lambda_2| & \\ & & |\Lambda_3| \end{bmatrix} X^T = X \begin{bmatrix} \left(\frac{1}{h_1}\right)^2 & & \\ & \left(\frac{1}{h_2}\right)^2 & \\ & & \left(\frac{1}{h_3}\right)^2 \end{bmatrix} X^T. \quad \text{(B4)}$$

The aspect ratio of M is limited by controlling the two smallest eigenvalues to be $(1/\texttt{adapt_max_anisotropy})^2$ times the largest. The eigenvalues of M are scaled so that the largest eigenvalue is $(h_o^*(h/h_o))^{-2}$, where h_o^* is an estimate of the current isotropic grid size given by adapt_current_h_method. The gradation of the M is limited with adapt_gradation if adapt_gradation is positive. If adapt_complexity is positive, the complexity (an integral measure of the adapted grid size) of M is scaled to match the requested adapt_complexity. Finally, if adapt_min_edge_length or adapt_max_edge_length are positive, the eigenvalues are limited to bound the spacing of the metric.

```
&adapt_metric_construction
  adapt_hessian_key               = 'mach'
  adapt_hessian_method            = 'lsq'
  adapt_max_anisotropy            = 1.0e6
  adapt_max_edge_growth           = 2.0
  adapt_max_edge_length           = -1.0
  adapt_min_edge_length           = -1.0
  adapt_output_tolerance          = -0.5
  adapt_complexity                = -1.0
  adapt_gradation                 = -1.0
  adapt_error_estimation          = 'embed'
  adapt_statistics                = 'median'
  adapt_exponent                  = 0.2
  adapt_feature_scalar_key        = 'density'
  adapt_feature_scalar_form       = 'delta'
  adapt_feature_length_exp        = 0.5
  adapt_intersect_metric_in_time  = .false.
  adapt_metric_from_file          = ''
  adapt_export_metric             = .false.
  adapt_twod                      = .false.
  adapt_verbose                   = .false.
  adapt_export_feature_scalar_key = 'none'
```

```
  adapt_visualize_metric          = 'none'
  adapt_current_h_method          = 'edge'
  adapt_current_h_gradation       = 1.5
/
```

`adapt_hessian_key = 'mach'`

This variable is used to define anisotropic Hessian,

`'mach'` is Mach number.

`'pressure'` is pressure.

`'entropy'` is entropy.

`'temp'` is temperature.

`'density'` is density.

`'vorticity-magnitude'` is the magnitude of the vorticity vector.

`adapt_hessian_method = 'lsq'`

This is the mathematical method used to recover the Hessian,

`'lsq'` applies a least-squares gradient calculation twice. First it computes gradients via least-squares. Then the Hessian is computed by a second application of least-squares to the reconstructed gradient.

`'green'` use a Green variational approach, see Alauzet and Loseille [61] for details.

`'kexact'` reconstructs the Hessian with a k-exact approach. See Barth [62] for details.

`'grad'` is volume-averaged element-based gradients, applied twice.

`'mesh'` implies the metric of the current grid for use in testing grid adaptation mechanics or maintaining the current anisotropy.

`adapt_max_anisotropy = 1.0e6`

This is the upper limit of the largest to smallest spacing in the metric.

`adapt_max_edge_growth = 2.0`

This is a limit on the change of isotropic grid size of the metric, where `adapt_max_edge_growth` is g and the change in isotropic grid size between the next and current grids is h/h_0. The feature-based metric is limited to $h/h_0 < g$ and the output-based metric is limited to $1/g < h/h_0 < g$. A value of 1 would constrain feature-based metric to refinement only. This setting limits the change in grid size for subsequent output-adapted grids and can be increased for more benign simulations or near output-adapted grid convergence.

`adapt_max_edge_length = -1.0`

This sets a maximum allowable spacing of the metric. It is a grid- and problem-dependent value and should be expressed in grid units. A negative value is unlimited.

`adapt_min_edge_length = -1.0`

This sets a minimum allowable spacing of the metric. It is a grid/problem dependent value and should be expressed in grid units. A negative value is unlimited.

`adapt_output_tolerance = -0.5`

This is the error request for output-based adaptation and the scaling of the scalar term for feature-based adaptation. Feature-based adaptation requires a positive number. Output-based adaptation can be negative to indicate a relative error reduction or positive to indicate an absolute error request. It is difficult to choose a good value for this tolerance, see `adapt_complexity` for a more intuitive way to request the adapted grid size.

`adapt_complexity = -1.0`

This is the target complexity for the metric. The complexity of a metric (C) is an integral measure of the density of the metric field,

$$C = \int_{\Omega} \sqrt{\det(M)}\, \mathrm{d}\Omega, \tag{B5}$$

where Ω is the computational domain. This option is intended to allow a user specification of the number of nodes in the adapted grid by uniformly scaling the metric to set its C to `adapt_complexity`. There is a difference between the requested complexity and the number of nodes in the adapted grid, which is examined by Park et al. [63] This is because the requested complexity is a continuous measure, but the metric is discrete. Also, the adaptation mechanics produce a grid that is near, but does not exactly match, the metric. Adjust the requested complexity manually to obtain the desired grid size if the grid is smaller or larger than expected. As detailed in reference [63], the ratio of nodes to complexity approaches two for 3D grids and a half for 2D grids.

`adapt_gradation = -1.0`

This is the allowable gradation of spacing between adjacent metric tensors. [64] A positive value activates gradation control, which should have parameter in the range $[1.1, 2.0]$. A negative value deactivates this option. A smaller value produces a more gradual spatial variation of the spacing request, e.g., a value of 1.0 indicates no variation and would result in a uniform grid.

`adapt_error_estimation = 'embed'`

This selects the method used for error estimation for output-based adaptation,

`'embed'` uses a uniformly refined grid and interpolated solution to estimate the output error. [31, 65] Warning: This option requires a large amount of memory to construct the embedded, uniformly refined grid.

`'single'` uses the current grid and reconstructed solution to estimate the output error. It requires much less memory than `'embed'` but does not provide an improved estimate of the functional. [31]

`'opt-goal'` is the optimal goal-oriented metric. [66] It has the same memory requirements as `'single'` and requires the namelist option `adapt_complexity` to be set. It is only recommended for steady Euler flow.

`adapt_statistics = 'median'`

This selects the method used for determining the intensity I level to equidistribute,

`'median'` uses the median of the error estimate intensity I to convert a relative error tolerance of a negative `adapt_output_tolerance` into an absolute tolerance. This is useful when there are a few, extremely large error estimates that corrupt the average.

`'average'` uses the average of the error estimate intensity I to convert a relative error tolerance of a negative `adapt_output_tolerance` into an absolute tolerance. This is provides better equidistribution when the error estimate is well behaved.

`adapt_exponent = 0.2`

This is the exponent on error estimate to map local error to a change in grid spacing. It is based on an a priori spatial error convergence estimate. [65]

`adapt_feature_scalar_key = 'density'`

This is the "key" flow variable (feature) on which to adapt for feature-based adaptation. It forms the scalar field S at each node based on,

`'mach'` is Mach number.

`'pressure'` is pressure.

`'entropy'` is entropy.

`'temp'` is temperature.

`'density'` is density.

`'vorticity-magnitude'` is the magnitude of the vorticity vector.

`adapt_feature_scalar_form = 'delta'`

This is the method to calculate feature-based refinement indicator from the `adapt_feature_scalar_key` scalar field S. The following terms are computed for each edge in the grid I_e and the nodal adaptation intensity I_n is the maximum edge value for all edges incident to a node,

$$I_n = \max_{e \in n} (I_e) \,, \tag{B6}$$

where e denotes each edge incident to node n. The S subscripts 1 and 2 denote the value at each end point of an edge. The edge terms are,

`'delta'` is the S jump across the edge, $I_e = |S_2 - S_1|$.

`'delta-l'` is the S jump across the edge times the edge length l to the `adapt_feature_length_exp` power p, $I_e = l^p |S_2 - S_1|$.

`'average-l'` is the average S of the two nodes of an edge times the edge length l, $I_e = \frac{l}{2}(S_2 + S_1)$.

`'ratio'` is the ratio of the largest to the smallest S at the edge nodes, $I_e = \max(|S_2/S_1|, |S_1/S_2|)$.

`'max'` is the largest S at the nodes of the edge, $I_e = \max(|S_2|, |S_1|)$.

`'none'` will not use scalar term. It uses a local Hessian normalization term accounting for the sensitivity of the L_p norm, where $p = 2$. [61] This option requires `adapt_complexity` to be set and `adapt_output_tolerance` is ignored.

`adapt_feature_length_exp = 0.5`

This is the exponent for use with `adapt_feature_scalar_form = 'delta-l'`.

`adapt_intersect_metric_in_time = .false.`

This will export a metric intersected over a window that includes each time step of the current run. It is used for fixed-point adaptation of time-accurate simulations. [66]

`adapt_metric_from_file = ''`

This reads the metric from this file instead of computing it when it is blank.

`adapt_export_metric = .false.`

This exports the metric for external grid adaptation tools.

`adapt_twod = .false.`

When `.true.`, compute a 2D metric from a one cell wide 3D grid containing a single layer of spanwise prism elements between symmetry planes. This is required when a 2D adaptation method is selected but the grid

is actually a one cell wide 3D grid, because the adjoint does not have a 2D specific mode.

`adapt_verbose = .false.`

When `.true.`, this option reports more information during the error estimation process. This can be helpful for finding the source of NaNs.

`adapt_export_feature_scalar_key = 'none'`

This is the export format for the feature scalar key, intensity I, and new isotropic size request h/h_0. It can be used for visualization or compiling statistics. It may be helpful for gaining insight into a setting for the `adapt_output_tolerance` T that targets a specific feature. The file name root is `[project_rootname]_key`. The formats available are,

`'none'` will not export.

`'cgns'` is CGNS format, requires FUN3D to be configured with a CGNS library.

`'fvuns'` is FieldView C-binary (Fortran stream) format.

`'VTK'` is legacy VTK format.

`'csv'` is a comma separated value format.

`'tec'` is a single image ASCII tecplot format.

`'raw_ascii'` is a single image raw ASCII space separated format

`adapt_visualize_metric = 'none'`

This is the format to export the metric for visualization,

`'none'` will not export.

`'cgns'` is CGNS format, requires FUN3D to be configured with a CGNS library.

`'fvuns'` is FieldView C-binary (Fortran stream) format.

`'VTK'` is legacy VTK format.

`'csv'` is a comma separated value format.

`'raw_ascii'` is a single image raw ASCII space separated format.

`adapt_current_h_method = 'edge'`

This is the method to estimate the current spacing of the grid,

`'edge'` will use the shortest incident edge at a node.

`'implied'` will use the largest eigenvalue of adjacent element implied metrics.

`adapt_current_h_gradation = 1.5`

This limits the gradation of the current spacing estimate by requiring it to be larger than this ratio of its neighbor's spacing estimate.

B.4.37 &adapt_mechanics

This namelist contains variables that control how grid adaptation is performed. More details on general metric-based grid adaptation can be obtained in section 8. This namelist also contains variables to control specialized line adaptation `adapt_library = 'line'` and shock fitting line adaptation `adapt_library = 'sfline'`.

Variables with the `ladapt_` prefix control line adaptation and variables with a `sfline_` prefix control shock fitting line adaptation. These specialized 1D adaptation methods originated in the LAURA code and have a number of requirements that are described in the LAURA User's Manual. [67] The grid origin must be structured and all nodes assigned to a unique line. All lines must have the same number of nodes. If running in parallel, the `partition_lines = .true.` option in the `&partitioning` namelist must be active. The outer boundary (opposite solid walls) can be moved in or out to align with a developing bow shock and the distribution of points across the boundary layer can be adjusted to recover a target cell Reynolds number. If the grid has prisms grown off a solid surfaces then the distribution of prism heights can be adjusted to recover a target cell Reynolds number at the wall while retaining the the original spacing at the top of the prism stack.

Variable names beginning with `sfline_` control how shock fitting meshes are adapted. Currently the shock fitting is only available with line adaptation which is engaged by specifying `adapt_library = 'sfline'`. The variables `ladapt_re_cell`, `ladapt_ep0_grd`, `ladapt_fstr`, and `ladapt_g_limiter` are also active with shock fitting.

```
&adapt_mechanics
  adapt_library              = 'refine/one'
  adapt_project              = ''
  adapt_freezebl             = -1.0
  adapt_cycles               = 2
  adapt_bamg_command         = 'bamg'
  adapt_bamg_geometry_format = 'amdba'
  ladapt_fsh                 = 0.8
  ladapt_fstr                = 0.75
  ladapt_fctrjmp             = 1.05
  ladapt_re_cell             = 1.
  ladapt_beta_grd            = 0.
  ladapt_ep0_grd             = 0.
  ladapt_max_distance        = 1.e+06
  ladapt_jumpflag            = 2
  ladapt_freq                = 0
  ladapt_max                 = 1000
  ladapt_g_limiter           = 0.
  sfadapt_fsbuffr            = 3
```

```
  sfadapt_ceqinc              = 0.5
  sfadapt_shkdtct             = 1.0e-01
  sfadapt_fsfrac0             = 1.0e+00
  sfadapt_fsfraci             = 1.0e-01
/
```

`adapt_library = 'refine/one'`

This is the adaptation library to call from FUN3D. The options are,

`'refine/one'` is the refine tetrahedral metric-based adaptation library. See Park [31] for a detailed description. This library lacks a 2D specific mode.

`'refine/two'` is a version of the refine adaptation library that is still undergoing development. It is based on original version of refine with some ideas from Michal and Krakos. [68] This library emulates a 2D capability by adapting a 3D grid with one layer of spanwise prism elements between symmetry planes.

`'meshsim'` is the Simmetrix MeshSim™ adaptation library.

`'bamg'` is the BAMG [4] 2D metric-based adaptation library. The 2D metric and solution files in BAMG format will be exported from a 3D grid with one layer of spanwise prism elements between symmetry planes. The BAMG executable will be run in the `../Flow` directory by using its native `.ambda` or `.msh` formats, see `adapt_bamg_geometry_format`.

`'line'` is line-based adaptation [67] for structured grids. The user must set `partition_lines = .true.` in the `&partitioning` namelist when running in parallel.

`'sfline'` is shock-fitting line-based adaptation for structured grids. The user must set `partition_lines = .true.` in the `&partitioning` namelist when running in parallel.

`'interpolate'` will linearly interpolate the `project_rootname` solution to an existing `adapt_project` grid without adaptation by using the approach of Shenoy. [69] This option reuses some of the feature-based adaptation mechanics, which requires `adapt_tolerance_output = 1.0` to be set in the `&adapt_metric_reconstruction` namelist.

`adapt_project = ''`

This is the project name for exporting the adapted grid and solution. An empty string appends `_R` to the `project_rootname` from the `&project` namelist.

`adapt_freezebl = -1.0`

This prevents modification of the grid within this distance of solid wall boundaries. It is used to preserve an existing boundary layer grid struc-

ture and is specified in grid units. A negative value will disable freezing. A distance that equates to a y^+ of approximately 300, the middle of the log-layer is recommended. To reduce size inconsistencies between the frozen and adapted zones, chose a `adapt_freezebl` where boundary layer element aspect ratio matches the `adapt_max_anisotropy` in the `&adapt_metric_construction` namelist. For more discussion on this technique, see Park and Carlson. [70] This option is only used by `adapt_library = 'refine/one'`.

`adapt_cycles = 2`

This is the number of adaptation passes. Choosing more cycles will produce a grid that better matches the metric, but can increase the time required for adaptation. This option is only used by `adapt_library = 'refine/one'`.

`adapt_bamg_command = 'bamg'`

This is the system command to execute BAMG. It may include the full path or command line arguments.

`adapt_bamg_geometry_format = 'amdba'`

BAMG geometry file format

`'amdba'` specifies `-b [project_rootname].ambda` as the BAMG geometry source. This will spline current boundary nodes to form the geometry of the domain boundary. It is approximate, but less likely to fail than `.msh` file boundary reconstruction.

`'msh'` specifies `-b [project_rootname].msh` as the BAMG geometry source. This will access the original geometry `.msh` file to define the domain boundary, but BAMG may have problems with boundary reconstruction.

`ladapt_fsh = 0.8`

This is the fraction of the distance between the body and the opposing boundary along a line of nodes where the captured shock is situated.

`ladapt_fstr = 0.75`

This is the fraction of edges along a line that are intended to resolve the boundary layer.

`ladapt_fctrjmp = 1.05`

This is the property ratio used to detect the shock when marching from the freestream toward the body. It is assumed the flow above the shock is uniform and the property ratios across edges along the line remain equal to one until the shock is encountered.

`ladapt_re_cell = 1.`

This is the target cell Reynolds number based on the speed of sound used to define the edge length Δn of the first edge leaving the wall. $re_{cell} = \rho \Delta n c / \mu$.

`ladapt_beta_grd = 0.`

This is an exponential grid distribution parameter. Any value greater than 1 will override adaptation. If it is used to override adaptation to local flow, the recommended value is 1.15.

`ladapt_ep0_grd = 0.`

This is a grid clustering factor to pull nodes into the captured shock. A minimum value of 0 produces no clustering. A maximum value of 6.25 produces greatest clustering. Large values can produce negative volumes. If a negative volume is reported, then reduce the magnitude of this parameter.

`ladapt_max_distance = 1.e+06`

This is the maximum distance in grid units the outer boundary can be moved away from the body. This parameter is useful when adapting to the shock in the wake, where the adapting grid may become excessively skewed. This value then effectively defines the maximum length of the wake domain.

`ladapt_jumpflag = 2`

This is an integer flag used to select the method of shock detection,

`'0'` is no movement of outer boundary. Resolution in the boundary layer is adjusted to recover target `ladapt_re_cell`.

`'1'` uses pressure as sensing parameter.

`'2'` uses density as sensing parameter.

`'3'` uses temperature as sensing parameter.

`'4'` scales all edges along the line by a factor equal to `ladapt_fctrjmp`.

`ladapt_freq = 0`

This is the number of relaxation steps between calls to line adaptation. The value 0 prevents line adaptation.

`ladapt_max = 1000`

This is the maximum number of calls to line adaptation permitted.

`ladapt_g_limiter = 0.`

This parameter insures a minimum mesh size does not get too big on a line and cause local skewing. It must be a positive number to engage.

`sfadapt_fsbuffr = 3`

This is the number of buffer nodes between the freestream boundary and the fitted shock. Zero buffer nodes make the freestream boundary the shock fitting surface, three buffer nodes moves the shock fitting surface three nodes into the interior of the computational domain relative to the freestream boundary.

`sfadapt_ceqinc = 0.5`

This is the shock fitting compatibility equation influence coefficient. A value of 0.0 means that shock fitting is controlled by the continuity equal to the compatibility equation, a value of 1.0 means that the shock fitting is controlled by momentum equation compatibility equal to the compatibility equation, and a value of 0.5 means that shock fitting is equally controlled by the continuity and momentum compatibility equations.

`sfadapt_shkdtct = 1.0e-01`

This is the shock fitting shock-boundary interaction detector coefficient. This parameter controls when the shock is considered to be interacting with the shock fitting boundary nodes and determines when the boundary begins to be fitted to the shock. The value is one minus the local relative density jump below which the shock is not considered to be interacting with the boundary. Increasing this parameter decreases the sensitivity of the sensor and decreasing this parameter increases the sensitivity of the sensor.

`sfadapt_fsfrac0 = 1.0e+00`

This is the shock fitting initial freestream velocity boundary velocity fraction. When the bow shock has not yet reached the freestream boundary, the shock fitting equations are not valid. However, the code allows the freestream boundary to initially move towards the body at some fraction of the freestream boundary velocity. A value of 0.0 freezes the freestream boundary until the shock reaches it, a value of 1.0 moves the freestream boundary at the freestream velocity until the shock reaches it, and a value in the range $(0.0, 1.0)$ moves the freestream boundary towards the body at freestream total velocity*`sfadapt_fsfrac0`.

`sfadapt_fsfraci = 1.0e-01`

This is the shock fitting interaction freestream velocity boundary velocity fraction. When the bow shock has been determined to be interacting with the freestream boundary, the shock fitting equations are not valid all along the shock. However, the code allows the initial interaction speed of the shock with the freestream boundary to be scaled back at some fraction of the freestream boundary and/or shock velocity. A

value of 0.1 constrains the freestream boundary to move at a fraction of the freestream velocity and a value in the range $(0.0, 1.0)$ moves the freestream boundary towards/away from the body at freestream total velocity*`sfadapt_fsfraci`.

B.4.38 &massoud_output

This namelist controls the output of files for interaction with the MDO packages (e.g., design, aeroelastics). In a design setting, these files contain the information necessary to parameterize the surface grid(s). The command-line option `--write_aero_loads_to_file` is required to output the aeroelastics file `[project_rootname]_ddfdrive_bodyN.dat` and the command line option `--write_massoud_file` is required to output the design parameterization file `[project_rootname]_massoud_bodyN.dat` for each of the `N` body groups present.

```
&massoud_output
  n_bodies                      = 0
  nbndry(:)                     = 0
  boundary_list(:)              = ''
  output_initial_state          = .false.
  massoud_output_freq           = -1
  massoud_file_format           = 'ascii'
  massoud_use_initial_coords    = .false.
  aero_loads_output_freq        = -1
  aero_loads_file_format        = 'ascii'
  include_time_info             = .true.
  aero_loads_use_initial_coords = .false.
  aero_loads_dynamic_pressure   = 1.0
  output_transform(1,1:4)       = 1.0, 0.0, 0.0, 0.0
  output_transform(2,1:4)       = 0.0, 1.0, 0.0, 0.0
  output_transform(3,1:4)       = 0.0, 0.0, 1.0, 0.0
  output_transform(4,1:4)       = 0.0, 0.0, 0.0, 1.0
  output_scale_factor           = 1.0
  input_transform(1,1:4)        = 1.0, 0.0, 0.0, 0.0
  input_transform(2,1:4)        = 0.0, 1.0, 0.0, 0.0
  input_transform(3,1:4)        = 0.0, 0.0, 1.0, 0.0
  input_transform(4,1:4)        = 0.0, 0.0, 0.0, 1.0
  input_scale_factor            = 1.0
/
```

`n_bodies = 0`

This is the number of user-defined bodies. For moving-grid cases, these bodies are typically the same as those defined as moving bodies, but that need not be the case.

`nbndry(:) = 0`

This is the number of boundary patches listed for a given body.

`boundary_list(:) = ''`

This is a list of boundary patch numbers for a given body. Commas and

dashes can be used to specify ranges, i.e., `'1,2,5-7'`.

`output_initial_state = .false.`

When `.true.`, this causes requested massoud or aero loads data to be written for the initial state of the solution in the current run.

`massoud_output_freq = -1`

This is the iteration frequency of massoud output, where the special value `-1` corresponds to once at the end of a successful run.

`massoud_file_format = 'ascii'`

This is the format of the massoud file; the alternate choice is `'stream'` (C binary).

`'ascii'` is ASCII file format

`'stream'` is Fortran stream (C binary) format

`massoud_use_initial_coords = .false.`

Write the massoud file for the x, y, z surface coordinates at t=0. Otherwise, use current x, y, z surface coordinates.

`aero_loads_output_freq = -1`

This is the iteration frequency of aerodynamic loads output, where the special value `-1` corresponds to once at the end of a successful run.

`aero_loads_file_format = 'ascii'`

This is the format of the aerodynamic loads file; the alternate choice is `'stream'` (C binary).

`'ascii'` is ASCII file format

`'stream'` is Fortran stream (C binary) format

`include_time_info = .true.`

Write simulation time and strand info to ASCII Tecplot™ file(s). Including time info in the files makes animation within Tecplot™ very simple.

`aero_loads_use_initial_coords = .false.`

Write the current aerodynamic loads mapped to the x, y, z surface coordinates at t=0. Otherwise, use current x, y, z surface coordinates. This option is only relevant if the grid is moved or changed during the solution process.

`aero_loads_dynamic_pressure = 1.0`

The dynamic pressure used to convert force coefficients into forces; the default value leaves the output in coefficient form. Note that the input

variable `output_scale_factor` separately handles scaling of coordinate values, so care must be exercised to insure appropriate dimensional forces if both are used in combination.

`output_transform(1,1:4) = 1.0, 0.0, 0.0, 0.0`

This is a user-specified transform matrix to allow output of aero loads in a custom coordinate system; typically used to output aero loads in an FEM/CSD coordinate system that differs from the CFD coordinate system. Note, at this point in time, this transform is applied to ALL bodies that are defined in this namelist. Note: the transform matrix should NOT include a scaling factor (e.g. inches to meters); any required scale factor is input separately.

`output_scale_factor = 1.0`

Allows a scaling of the output x,y,z coordinates (e.g. meters to inches). Scaling is applied as a multiplicative factor.

`input_transform(1,1:4) = 1.0, 0.0, 0.0, 0.0`

This is a user-specified transform matrix to allow input of a new surface mesh that is defined in a custom coordinate system; typically used to read in a displaced surface defined in an FEM/CSD coordinate for use in the CFD coordinate system. Note, at this point in time, this transform is applied to ALL bodies that are defined in this namelist. Note: the transform matrix should NOT include a scaling factor (e.g. inches to meters); any required scale factor is input separately.

`input_scale_factor = 1.0`

Allows a scaling of the input x,y,z coordinates (e.g. inches to meters). Scaling is applied as a multiplicative factor.

B.4.39 &sonic_boom

This namelist specifies how near-field pressures are extracted from FUN3D for comparison to wind tunnel measurements, atmospheric propagation to the ground by another code, or for boom related adjoint cost functions. When `nsignals` is greater than zero, the pressure signature is output as a Tecplot™ file. The number of points in this output file is determined by the number of element faces intersected by each user-specified ray, and will span the x-extent of the entire mesh at that ray location.

The rays are rotated about (`x_cor`,`z_cor`) by `angle_of_attack` when the variable `rotate_ray_by_angle_of_attack` is true.

This namelist is also used with the sonic boom adjoint cost functions `boom_targ` (section 9.2.7) and `sboom` (section 9.2.8). To form the cost function the `../rubber.data` file is required for the flow and adjoint solvers. See section 6.3 for details on the minimum inputs required for specifying the adjoint cost function. To compute the value of the objective function in the flow solver, the `--design_run` command line option is required.

```
&sonic_boom
  nsignals                      = 0
  y_ray(:)                      = 0.001
  z_ray(:)                      = 0.0
  x_cor                         = 0.0
  z_cor                         = 0.0
  rotate_ray_by_angle_of_attack = .true.
  npoints                       = 1000
  ray_x_limit_method            = 'local'
  x_lower_bound                 = -1.e20
  x_upper_bound                 = 1.e20
  dp_pinf                       = .true.
  p_pinf                        = .false.
  weight                        = .false.
/
```

`nsignals = 0`

This is the total number of signal rays.

`y_ray(:) = 0.001`

This is the y value of each ray before `angle_of_attack` rotation. It is dimensioned 1 to `nsignals`.

`z_ray(:) = 0.0`

This is the z value of each ray before `angle_of_attack` rotation. It is dimensioned 1 to `nsignals`.

`x_cor = 0.0`

This is the x center of `angle_of_attack` rotation.

`z_cor = 0.0`

This is the z center of `angle_of_attack` rotation

`rotate_ray_by_angle_of_attack = .true.`

When `.true.`, this will rotate the rays by `angle_of_attack` about `x_cor` and `z_cor`.

`npoints = 1000`

This is the nominal number of points in each ray that is used to construct the cost function. Any points lying outside the domain will be ignored. The points are linearly spaced between the lower and upper bound of x.

`ray_x_limit_method = 'local'`

This is the method used to determine the x-direction start and end of the ray when forming the objective function. If `x_lower_bound` and/or `x_upper_bound` is specified, then `ray_x_limit_method` must be set to 'explicit'.

`'local'` sets each ray limit independently by computing the x min and x max of all grid cells intersected by the ray.

`'explicit'` explicitly sets the x min and x max of all rays with the `x_lower_bound` and `x_upper_bound` namelist variables. Only valid for adjoint cost function `boom_targ`.

`x_lower_bound = -1.e20`

This is the explicit x lower bound for `ray_x_limit_method='explicit'` in the cost function definition.

`x_upper_bound = 1.e20`

This is the explicit x upper bound for `ray_x_limit_method='explicit'` in the cost function definition.

`dp_pinf = .true.`

When `.true.`, this will include normalized delta pressure $(p - p_\infty)/p_\infty$ in tecplot output.

`p_pinf = .false.`

When `.true.`, this will include normalized pressure $(p)/p_\infty$ in tecplot output.

`weight = .false.`

When `.true.`, this will include a weight of one in tecplot output for use in setting up a near-body target pressure design.

B.4.40 &sboom

This namelist contains variables that specify the inputs required to execute the sBOOM library. See section 9.2.8 for details.

```
&sboom
  alt                 = 45000.0
  hg                  = 0.0
  headangle           = 0.0
  climbangle          = 0.0
  dmdt                = 0.0
  turnrate            = 0.0
  climbrate           = 0.0
  rs                  = 500.0
  signum              = 10000
  zeronum             = 1200
  tol2                = 1.e-6
  nonlinear           = 1
  thermoviscous       = 1
  relaxation          = 1
  initialtimestep     = 0.01
  refl                = 1.9
  outflag             = 0
  numouts             = 1000
  tol                 = 0.005
  inputininches       = 0
  adjmode             = 1
  runmode             = 1
  objmode             = 1
  nazimuths           = 1
  phi(:)              = 0.0
  targetdbas(:)       = 56.0
  trajinfo(:)         = 0.0
  createtarget        = 0
  lowerbound          = -1000.0
  upperbound          = -1000.0
  lappass             = 500
  target_numpts(:)    = 0
  target_xx(:,:)      = 0.0
  target_dpress(:,:)  = 0.0
  tflag               = 0
  ntalt               = 0
  ztalt(:)            = 0.0
  talt(:)             = 0.0
  windflag            = 0
  nwindx              = 0
```

```
  zwindx(:)          = 0.0
  windx(:)           = 0.0
  nwindy             = 0
  zwindy(:)          = 0.0
  windy(:)           = 0.0
  rflag              = 0
  nhalt              = 0
  zrh(:)             = 0.0
  rh(:)              = 0.0
  bodylen            = 127.0
  reg                = 1.e-4
  regr               = 1.e-4
  lbd                = 0.99
  ubd                = 1.0
  robust_var_list    = ''
/
```

`alt = 45000.0`

This is the cruise altitude of the full-scale vehicle in feet.

`hg = 0.0`

This is the height of the ground in feet.

`headangle = 0.0`

This is the vehicle heading angle in degrees. A 180 heading would mean away from the x-axis, a 90 heading would mean away from the y-axis. This option is only relevant when winds are specified.

`climbangle = 0.0`

The is the vehicle climb angle in degrees.

`dmdt = 0.0`

This is the acceleration of the vehicle in 1/second (Mach number per second).

`turnrate = 0.0`

This is the turning rate of the vehicle in degrees per second.

`climbrate = 0.0`

This is the climb rate of the vehicle in degrees per second.

`rs = 500.0`

This is the off-body distance in full-scale feet. This full-scale distance should match the location in grid units used to define `y_ray` and `z_ray` in `&sonic_boom`.

`signum = 10000`

This is the number of points representing the off-body waveform for propagation. Increasing the number points reduces the discretization error of the Burgers equation and increase the execution time of sBOOM.

`zeronum = 1200`

This in the number of points used to zero pad the front part of the signature. These points are required to prevent the initial shock from propagating to the front of the Burgers equation domain and causing a numerical instability. The actual waveform will be sampled using (`signum-zeronum`) points. Typically, 10–20% of `signum` is required.

`tol2 = 1.e-6`

This is the leading zero tolerance of the input waveform. It is used to truncate the initial portion of the off-body waveform before zero padding, where dp/p value are less than this number.

`nonlinear = 1`

This controls solution non-linearity,

`'1'` uses cumulative non-linearity.

`'0'` does not use cumulative non-linearity.

`thermoviscous = 1`

This controls the modeling of thermo-viscous absorption,

`'1'` uses cumulative thermo-viscous absorption.

`'0'` does not use thermo-viscous absorption.

`relaxation = 1`

This controls the modeling of molecular relaxation,

`'1'` uses cumulative molecular relaxation.

`'0'` does not use molecular relaxation.

`initialtimestep = 0.01`

Nondimensional initial step size for propagation. A smaller number prevents a multi-valued function, but increases execution time. If you receive a discontinuity error, reduce this value.

`refl = 1.9`

This is the ground reflection factor used to scale ground signatures.

`outflag = 0`

This determines the format of the output,

`'0'` outputs delta pressure in psf as a function of time in ms.

`'1'` outputs delta pressure divided by freestream pressure as a function of x in feet.

`numouts = 1000`

This is the number of points requested in the ground signature.

`tol = 0.005`

This is the slope tolerance needed for removing zero paddings from the ground signatures. This allows signatures at different azimuthal angles to have the same time axis starting with the initial shock.

`inputininches = 0`

This is the units of the FUN3D grid and geometry to scale the near field signature x for propagation,

`'0'` for FUN3D grid units in feet.

`'1'` for FUN3D grid units in inches.

`'2'` for FUN3D grid units in meters.

`adjmode = 1`

This is the sBOOM simulation mode,

`'1'` for a primal and adjoint simulation.

`'0'` for primal simulation only.

`'2'` for a primal and adjoint simulation with additional atmospheric sensitivities

`runmode = 1`

This is the type of propagation and the class of cost function,

`'1'` propagates near field dp/p_∞ to ground and adjoint sensitivities of ground based metrics defined by `objmode`. The target pressure is specified with `target_numpts`, `target_dpress`, and `target_xx`.

`'0'` reverse propagates near field dp/p_∞ to compute equivalent area (when `rs`< (`alt`−`hg`)) and directly converts off-body pressures to equivalent area (when `rs`> (`alt`−`hg`)). No ground signature or ground-based cost function is computed. See `bodylen`, `reg`, `regr`, `lbd`, and `ubd`. The target area distribution is specified with `target_numpts`, `target_dpress`, and `target_xx`.

`objmode = 1`

This is the cost function definition. The value of `runmode` changes its behavior as follows,

'1' for an A-weighted loudness target of $I = (dBA - dBA_t)^2$ when `runmode=1` and an equivalent area target $I = \sum_{i=1}^{N} \frac{1}{2}[Ae(i) - Ae_{target}(i)]^2$ when `runmode=0`.

'2' for an inverse pressure design objective of $I = \sum_{i=1}^{N}[p(i) - p(t,i)]^2$ when `runmode=1` and an equivalent area sum $I = \sum_{i=1}^{N} Ae(i)^2$ when `runmode=0`.

'3' for combined A-weighted loudness and inverse pressure design objective of $I = (dBA - 56.0)^2 + \sum_{i=1}^{N}[p(i) - p(t,i)]^2$ when `runmode=1`.

'4' for an A-weighted loudness objective of $I = dBA$ when `runmode=1`.

`nazimuths = 1`

This is the number of azimuths to propagate. The `nazimuths` must match `nsignals` in `&sonic_boom`.

`phi(:) = 0.0`

This is a `nazimuths` length vector of azimuthal locations in degrees.

`targetdbas(:) = 56.0`

This is the target (dBA_t) at each azimuthal location when `objmode=1`.

`trajinfo(:) = 0.0`

This is the trajectory information input to sBOOM

`createtarget = 0`

This is the source of a ground target signature,

'0' for no ground target signature.

'1' to internally create a ground target by Laplace smoothing. The smoothing is controlled by `lowerbound`, `upperbound`, and `lappass`.

'2' for a user specified target. The target is defined by the `target_numpts`, `target_xx`, and `target_dpress` variables.

`lowerbound = -1000.0`

When `createtarget=1`, this is the lower bound in time (milliseconds) after which the user wants to Laplace smooth the computed signature to form the target. When `runmode=0`, this defines the start of locations in X (feet) where any difference in equivalent area between actual and target equivalent areas will contribute to the cost functional. Outside these bounds, even if the equivalent area does not match the target, it does not contribute to the cost functional.

`upperbound = -1000.0`

When `createtarget=1`, this is the upper bound in time (milliseconds) before which the user wants to Laplace smooth the computed signature to form the target. When `runmode=0`, this defines the end of locations in X (feet) where any difference in equivalent area between actual and target equivalent areas will contribute to the cost functional. Outside these bounds, even if the equivalent area does not match the target, it does not contribute to the cost functional.

`lappass = 500`

The number of Laplace smoothing passes to generate a target ground signature. A higher number increases the smoothness of the target. It is only used for `createtarget=1`.

`target_numpts(:) = 0`

This is the number of points in the `target_xx` and `target_dpress` at each azimuth. It is used for `runmode=1` with `objmode=2,3` or `runmode=0` with `objmode=1`.

`target_xx(:,:) = 0.0`

This is the time (in milliseconds) of the target signature at each azimuth for `runmode=1` or x in feet for `runmode=0`. It is only used for some objective functions, see `objmode`. The first index is azimuthal location and the second index is the target signature point.

`target_dpress(:,:) = 0.0`

This is the delta pressure (in psf) of the target signature at each azimuth for `runmode=1` or the equivalent area target for `runmode=0`. It is only used for some objective functions, see `objmode`. The first index is azimuthal location and the second index is the target signature point.

`tflag = 0`

This controls the source for the atmospheric temperature distribution,

`'0'` for the 1976 U.S. Standard Atmosphere temperature profile.

`'1'` for a temperature profile specified by `ntalt`, `ztalt`, and `talt`.

`ntalt = 0`

This is the number of `ztalt` altitude and `talt` temperature pairs to define the temperature profile.

`ztalt(:) = 0.0`

This is `ntalt` length vector of altitudes (in meters) to specify an atmospheric temperature distribution.

`talt(:) = 0.0`

This is `ntalt` length vector of temperature (in Fahrenheit) to specify an atmospheric temperature distribution.

`windflag = 0`

This controls the source for winds,

`'0'` for no winds.

`'1'` for a wind profile specified by `nwindx`, `windx`, `zwindx`, `nwindy`, `windy`, and `zwindy`.

`nwindx = 0`

This is the number of `zwindx` altitude and `windx` x-wind pairs that define the wind profile.

`zwindx(:) = 0.0`

This is a vector of length `nwindx` of altitude (in meters) to specify a wind profile.

`windx(:) = 0.0`

This is a vector of length `nwindx` of x-wind speeds (in meters/sec) to specify a wind profile.

`nwindy = 0`

This is the number of `zwindy` altitude and `windy` y-wind pairs that define the wind profile.

`zwindy(:) = 0.0`

This is a vector of length `nwindy` of altitude (in meters) to specify a wind profile.

`windy(:) = 0.0`

This is a vector of length `nwindy` of y-wind speeds (in meters/sec) to specify a wind profile.

`rflag = 0`

This controls the source for the atmospheric humidity distribution,

`'0'` for the 1976 U.S. Standard Atmosphere relative humidity profile.

`'1'` for a relative humidity profile specified by `nhalt`, `zrh`, and `rh`.

`nhalt = 0`

This is the number of `zrh` altitude and `rh` relative humidity pairs.

`zrh(:) = 0.0`

This is a vector of length `nhalt` of altitude (in meters) to specify a relative humidity profile.

`rh(:) = 0.0`

This is a vector of length `nhalt` of relative humidity (in percent) to specify a relative humidity profile.

`bodylen = 127.0`

This is the aircraft body length in feet. It is only used for the adjoint of equivalent area matching, `runmode=0` and `adjmode=1`.

`reg = 1.e-4`

This is the thermo-viscous absorption regularization parameter. A smaller value could lead to an ill-posed reverse diffusion problem. A higher value increases error. Applicable only when `rs`< (`alt`−`hg`). It is only used for equivalent area, `runmode=0`.

`regr = 1.e-4`

This is the molecular relaxation regularization parameter. A smaller value could lead to an ill-posed reverse diffusion problem. A higher value increases error. Applicable only when `rs`< (`alt`−`hg`). It is only used for equivalent area, `runmode=0`.

`lbd = 0.99`

This is the under-deviation parameter for reversed equivalent area matching. Equivalent area deviations below a target are generally favorable to deviations above a target. Equivalent area matching cost functions and their sensitivities are only computed when the equivalent area is within the `lbd` and `ubd` limits. It is only used for the adjoint of equivalent area matching, `runmode=0` and `adjmode=1`.

`ubd = 1.0`

This is the over-deviation parameter for reversed equivalent area matching. Equivalent area deviations below a target are generally favorable to deviations above a target. Equivalent area matching cost functions and their sensitivities are only computed when the equivalent area is within the `lbd` and `ubd` limits. It is only used for the adjoint of equivalent area matching, `runmode=0` and `adjmode=1`.

`robust_var_list = ''`

This is a list of uncertain variables to be used during robust optimization. Commas and dashes can be used to specify ranges, i.e., `'1,2,5-7'`.

B.4.41 &equivalent_area

This namelist contains variables that specify the inputs associated with equivalent area-based sonic boom cost functions, which is described in section 9.2.9. The number and order of these inputs should match the equivalent area (Ae) functions appearing in `../rubber.data`.

```
&equivalent_area
  nfunctions               = 0
  nplane(:)                = 0
  global_scaling_factor(:) = 1.0
  lift_scaling_factor(:)   = 1.0
  off_track_angle(:)       = 0.0
/
```

`nfunctions = 0`

This is the total number of Ae functions, including functions used as objectives and constraints.

`nplane(:) = 0`

This is the total number of cutting planes along x-axis for each Ae function.

`global_scaling_factor(:) = 1.0`

This is the Ae(x) scaling factor for each Ae function.

`lift_scaling_factor(:) = 1.0`

This is the Lift L(x) scaling factor for each Ae function.

`off_track_angle(:) = 0.0`

This is the off-track angle in degrees for each Ae function.

B.4.42 &press_box_function

This namelist contains variables that are required for the `press_box` function, which is described in section 9.2.10. The namelist requires the `../rubber.data` file for the flow and adjoint solvers. See section 6.3 for details on the minimum inputs required for specifying the adjoint cost function. To compute the functional in the flow solver, the `--design_run` command line option is required.

```
&press_box_function
  integrand_type = 0
  gid            = 1
  xmin           = -huge(1.0)
  xmax           = huge(1.0)
  ymin           = -huge(1.0)
  ymax           = huge(1.0)
  zmin           = -huge(1.0)
  zmax           = huge(1.0)
/
```

`integrand_type = 0`

This integer indicates the functional form.

`'0'` is the volume integral of pressure squared inside the defined box.

`'1'` is the volume integral of w-momentum inside the defined box.

`'2'` is the volume integral of u-momentum inside the defined box.

`'3'` is the density at the global node with index `gid`. Not admissible for `eqn_type = 'incompressible'`.

`'4'` is the time derivative of pressure at the global node with index `gid`.

`'5'` is the time derivative of density at the global node with index `gid`. Not admissible for `eqn_type = 'incompressible'`.

`gid = 1`

This integer is a global grid point index to be used with `integrand_type` = 3-5.

`xmin = -huge(1.0)`

This real value defines the lower bound in the x-direction for the box that encloses the volume integral.

`xmax = huge(1.0)`

This real value defines the upper bound in the x-direction for the box that encloses the volume integral.

`ymin = -huge(1.0)`

This real value defines the lower bound in the y-direction for the box that encloses the volume integral.

`ymax = huge(1.0)`

This real value defines the upper bound in the y-direction for the box that encloses the volume integral.

`zmin = -huge(1.0)`

This real value defines the lower bound in the z-direction for the box that encloses the volume integral.

`zmax = huge(1.0)`

This real value defines the upper bound in the z-direction for the box that encloses the volume integral.

B.4.43 &pstag_function

This namelist contains variables that are required for the `pstag` function, which is described in section 9.2.5. This namelist requires the `../rubber.data` file for the flow and adjoint solvers. See section 6.3 for details on the minimum inputs required for specifying the adjoint cost function. To compute the functional in the flow solver, the `--design_run` command line option is required.

```
&pstag_function
  slice_orientation = 1
  disk_radius       = 1.0
  x_disk_origin     = 0.0
  y_disk_origin     = 0.0
  z_disk_origin     = 0.0
/
```

`slice_orientation = 1`

This integer represents the orientation of the cutting plane. The acceptable values are 1 (x-plane), 2 (y-plane), and 3 (z-plane).

`disk_radius = 1.0`

This real value is the radius of the disk over which the function is to be evaluated.

`x_disk_origin = 0.0`

This real value is the x-coordinate of the origin of the disk.

`y_disk_origin = 0.0`

This real value is the y-coordinate of the origin of the disk.

`z_disk_origin = 0.0`

This real value is the z-coordinate of the origin of the disk.

B.4.44 &fan_distortion

This namelist specifies input parameters associated with the fan distortion objective function.

```
&fan_distortion
  sector_angle     = 60.0
  slice_angle      = 10.0
  weighting_factor = 'area'
/
```

`sector_angle = 60.0`

This real-valued scalar is the sector angle in degrees.

`slice_angle = 10.0`

This real-valued scalar is the sector increment angle in degrees.

`weighting_factor = 'area'`

This string specifies how to weight contributions to the fan-face averages appearing in the objective function. Valid values are:

`'area'` use area as weighting factor.

`'massflow'` use massflow as weighting factor.

B.4.45 &special_parameters

This namelist specifies changes to the discretization to handle elements with large face angles.

```
&special_parameters
  large_angle_fix        = 'off'
  override_bc_limitation = .false.
  distance_chunk_size    = 20000000
/
```

`large_angle_fix = 'off'`

Grids with with elements that have adjacent face angles that approach 180 degrees may result in a sudden onset of not a number (NaN). Grids produced by VGRID may contain these elements.

`'off'` uses all elements in viscous flux evaluation. This is a consistent viscous discretization.

`'on'` neglects viscous fluxes in cells containing angles between adjacent faces of 178 degrees or greater. This is an inconsistent discretization, but may allow the calculation of a solution on a grid that is not suitable for the consistent viscous discretization.

`override_bc_limitation = .false.`

Allow sensitivity analysis for cases with element-based boundary conditions. Users should contact `Fun3D-Support@lists.nasa.gov` to determine if this option can be used for their simulation.

`distance_chunk_size = 20000000`

Size of the buffer surface boundary for use in the minimum distance determination required for turbulence models.

B.4.46 &partitioning

This namelist controls options related to the domain decomposition required for parallel execution. The load balancing of each partition execution time can be adjusted with the relative weighting (and cost model) controls to improve parallel scaling.

```
&partitioning
  partitioner               = 'parmetis'
  lb_method                 = 'graph'
  topology                  = ''
  partition_lines           = .false.
  override_partition_vector = .false.
  write_partition_vector    = .false.
  metis_numbering_entry     = 17
  use_64bit_partitioning    = .false.
  imbalance_tol             = 1.01
  edge_weighting            = 1
  imesh_weighting           = 1
  element_weighting         = 0
  tet_cost                  = 10
  pyr_cost                  = 68
  prz_cost                  = 75
  hex_cost                  = 138
/
```

`partitioner = 'parmetis'`

This determines which partitioning package to use. FUN3D must be built against the corresponding external library to enable an option. The available tools are,

`'parmetis'` is the ParMETIS partitioning tool, see section A.8.2 for installation details.

`'metis'` is the METIS partitioning tool distributed with ParMETIS, see section A.8.2 for installation details. METIS can provide improved load balancing versus ParMETIS; however, serial METIS execution can increase memory requirements on the master node and grid processing time. See the related `metis_numbering_entry` variable description.

`'zoltan'` is the Zoltan partitioning tool, see section A.8.3 for installation details.

`lb_method = 'graph'`

This is the Zoltan load-balancing algorithm, requires `partitioner='zoltan'`.

`'graph'` graph partitioning.

`'hypergraph'` hypergraph partitioning. It is not valid for `twod_mode = .true.`.

`'hier'` hierarchical graph partitioning for multicore architectures. This option requires `topology` to be defined.

`topology = ''`

From the Zoltan documentation: "This comma-separated list of integers describes the topology of the multicore node. For example: `'2,8'` may refer to a dual-socket processor where the socket has 8 cores. `'2,4,6'` may refer to a dual-socket, 4-die, 6-core node. `'16'` would refer to a 16-core node. Zoltan assumes each node (processor) of the multicore machine has the same architecture, and that the MPI process ranks are consecutive on the multicore nodes. In particular, if your parameters imply there are 4 MPI processes on each multicore node, Zoltan will assume that processes 0, 1, 2, and 3 are on the same node. Your system administrator should be able to show you how to ensure that your processes are loaded in this order." This string has no default value, only applies when `partitioner='zoltan'`, and must be set if `lb_method='hier'`.

`partition_lines = .false.`

When `.true.`, this option accounts for implicit lines during partitioning to minimize intersections of lines with partition boundaries. See section 4.4 for more details on implicit lines and how they are specified. Only relevant when `partitioner='parmetis'`.

`override_partition_vector = .false.`

Override the node- (element-) based partition vector with a vector specified from disk. This file should be named `[project]_partition.data`. The data should be written as Fortran stream. The first entry in the file should be a 4-byte integer stating the number of intended partitions, followed by an 8-byte integer specifying the total number of grid points (elements). The remainder of the file should contain 4-byte integers representing the 1-based partition index for each of the grid points (elements) in the mesh. If a node-based partition is provided, it should be ordered according to the global points in the mesh file being used. If an element-based partition vector is provided, the list of elements corresponds to all of the elements contained in element family 1, followed by all of the elements contained in element family 2, and so forth, up through element family `n` (max of 4 families). The element families are numbered according to the order in which the first element type in each family was encountered while loading the mesh file.

`write_partition_vector = .false.`

After performing domain decomposition, write partition vector to disk.

`metis_numbering_entry = 17`

When `partitioner='metis'`, this integer indicates the location in the `METIS_OPTION_NUMBERING` metis.h header file enumerated type entry used for the 'options' array. The C enumerated type is **0-based**. This value is dependent on the METIS version being used; the default is appropriate for the METIS library that is bundled with ParMETIS v4.0.3.

`use_64bit_partitioning = .false.`

When `.true.`, this option specifies 64-bit arguments to the ParMETIS interface. The default is 32-bit arguments. Only valid when `partitioner='parmetis'`.

`imbalance_tol = 1.01`

This specifies the maximum acceptable load imbalance. For example, 1 percent imbalance or less is requested with `imbalance_tol = 1.01`.

`edge_weighting = 1`

This weight expresses the relative importance of the number of adjacent edges to a vertex on the cost of that vertex. It is a relative quantity as compared to `element_weighting` and `imesh_weighting`. Any of these three weights can be zero to deactivate that style of weighting. The cost of the nearest neighbor linear solution scheme of a vertex is proportional to the number of adjacent vertices (number of non-zeros in a matrix row).

`imesh_weighting = 1`

This is the relative importance of component grid (imesh) weighting for a composite overset grid system as compared to the other partitioning weights, `element_weighting` and `edge_weighting`. Any of these three weights can be zero to deactivate that style of weighting. This weight is ignored unless dynamic overset grids are utilized in the simulation. The intent is to load-balance the elasticity solver across the component meshes, which solves linear elasticity equations to determine volume grid deformation.

`element_weighting = 0`

This weight expresses the relative importance of the number of adjacent elements to a vertex on the cost of that vertex. It is a relative quantity as compared to `edge_weighting` and `imesh_weighting`. Any of these three weights can be zero to deactivate that style of weighting. The vertex cost of forming the viscous residual and linearization for the mixed-element implicit scheme scales with the number and relative cost of adjacent elements. A model for the relative cost of element types is constructed with `tet_cost`, `pyr_cost`, `prz_cost`, and `hex_cost`.

`tet_cost = 10`

This is the relative expense of computing fluxes and jacobians on tetrahedral elements that is used to construct an `element_weighting` cost model. The cost is a relative measure as compared to `pyr_cost`, `prz_cost`, and `hex_cost`.

`pyr_cost = 68`

This is the relative expense of computing fluxes and jacobians on pyramid elements that is used to construct an `element_weighting` cost model. The cost is a relative measure as compared to `tet_cost`, `prz_cost`, and `hex_cost`.

`prz_cost = 75`

This is the relative expense of computing fluxes and jacobians on prismatic elements that is used to construct an `element_weighting` cost model. The cost is a relative measure as compared to `tet_cost`, `pyr_cost`, and `hex_cost`.

`hex_cost = 138`

This is the relative expense of computing fluxes and jacobians on hexahedral elements that is used to construct an `element_weighting` cost model. The cost is a relative measure as compared to `tet_cost`, `pyr_cost`, and `prz_cost`.

B.4.47 &fwh_acoustic_data

This namelist controls the output of files for interaction with Ffowcs Williams and Hawkings (FWH) [71] acoustic propagation packages such as PSU-WOPWOP [72] or ANOPP2 [73].

```
&fwh_acoustic_data
  fwh_data_freq          = 0
  append_to_prior_data   = .true.
  output_initial_state   = .false.
  n_fwh_bndry            = 0
  fwh_bndry_list         = ''
  geom_time_variation(:) = 'constant'
  data_time_variation(:) = 'aperiodic'
  steps_per_period(:)    = 360
  face_center_data       = .false.
/
```

`fwh_data_freq = 0`

This is the iteration frequency of FWH output, where the special value `-1` corresponds to once at the end of a successful run. This frequency applies to all FWH surfaces.

`append_to_prior_data = .true.`

When `.true.`, this causes FWH data from the current run to be appended to existing FWH files from previous runs. If `.false.` and there are existing output files for the surfaces in the current `fwh_bndry_list`, the data in those files will be discarded and overwritten. This option applies to all FWH surfaces.

`output_initial_state = .false.`

When `.true.`, this causes FWH data to be written for the initial state of the solution in the current run. This option is typically used for periodic cases so that if the solution is run for a multiple of the period, FWH data is written for both the starting and ending points of the period.

`n_fwh_bndry = 0`

This is the number of mesh boundaries for which FWH surface data will be written, and is the number of boundary patches to be specified in `fwh_bndry_list`. When `-1` is given, the number of mesh boundaries are inferred from `fwh_bndry_list`. It can be helpful to set this number explicitly to ensure consistency with the variables `geom_time_variation`, `geom_time_variation`, and `steps_per_period`, where `fwh_bndry_list` is used to size their maximum dimension.

`fwh_bndry_list = ''`

This is a list of boundary patch numbers for which FWH surface data will be written. Commas and dashes can be used to specify ranges, i.e., `'1,2,5-7'`.

`geom_time_variation(:) = 'constant'`

This categorizes the time variation of the *geometry* on which FWH data is output. The most common use case, where all FWH geometries have the same type of time variation, is facilitated by setting the first entry in the array with a string that includes an `_all` suffix as described below. Its maximum dimension is set by `fwh_bndry_list`.

`'constant'` when this FWH surface geometry does not vary with time.

`'periodic'` when this FWH surface geometry is periodic in time

`'aperiodic'` when this FWH surface geometry varies with time, but it is *not* periodic in time.

`'constant_all'` assigns `'constant'` to all FWH surface geometries, when `geom_time_variation(1) = 'constant_all'`.

`'periodic_all'` assigns `'periodic'` to all FWH surface geometries, when `geom_time_variation(1) = 'periodic_all'`.

`'aperiodic_all'` assigns `'aperiodic'` to all FWH surface geometries, when `geom_time_variation(1) = 'aperiodic_all'`.

`data_time_variation(:) = 'aperiodic'`

This categorizes the time variation of the FWH *data* (surface pressure) that is output. The most common use case, where all FWH data have the same type of time variation, is facilitated by setting the first entry in the array with a string that includes an `_all` suffix as described below. Its maximum dimension is set by `fwh_bndry_list`.

`'constant'` when this FWH surface data does not vary with time.

`'periodic'` when this FWH surface data is periodic in time

`'aperiodic'` when this FWH surface data varies with time, but it is *not* periodic in time.

`'constant_all'` assigns `'constant'` to all FWH surface data, when `data_time_variation(1) = 'constant_all'`.

`'periodic_all'` assigns `'periodic'` to all FWH surface data, when `data_time_variation(1) = 'periodic_all'`.

`'aperiodic_all'` assigns `'aperiodic'` to all FWH surface data, when `data_time_variation(1) = 'aperiodic_all'`.

`steps_per_period(:) = 360`

When `geom_time_variation = 'periodic'` or `data_time_variation = 'periodic'`, this indicates the number of time steps in one period. When both `geom_time_variation` and `data_time_variation` are set to `'periodic'` for a particular surface, both geometry and data are assumed to have the same period. The most common use case, where all periodic FWH surfaces have the same period, is facilitated by setting the period of the first FWH surface to a negative value. For example, `steps_per_period(1) = -(steps_per_period for all)`. Its maximum dimension is also set by `fwh_bndry_list`.

`face_center_data = .false.`

When `.true.`, this option provides data at face centers. When `.false.`, the acoustic data is provided at surface grid nodes. Nodal output is the preferred, since it results in smaller files and provides connectivity data that may be required by the FWH code. The option for data at face centers is provided for backwards compatibility with older processes. This option applies affects all output FWH surfaces.

B.4.48 &vortex_generator

This namelist is used to specify parameters related to source terms designed to simulate the effects of vortex generators.

```
&vortex_generator
  number_of_vgs           = 0
  configuration(:)        = 'area_and_height'
  boundary_patch1(:)      = 0
  boundary_patch2(:)      = 0
  planform_area(:)        = 0.0
  height(:)               = 0.0
  calibration_constant(:) = 0.0
  point1_xcoord(:)        = 0.0
  point1_ycoord(:)        = 0.0
  point1_zcoord(:)        = 0.0
  point2_xcoord(:)        = 0.0
  point2_ycoord(:)        = 0.0
  point2_zcoord(:)        = 0.0
  point3_xcoord(:)        = 0.0
  point3_ycoord(:)        = 0.0
  point3_zcoord(:)        = 0.0
  reverse_t(:)            = .false.
  reverse_n(:)            = .false.
/
```

`number_of_vgs = 0`

Specifies the number of user-defined vortex generators (max 1000).

`configuration(:) = 'area_and_height'`

Specifies the input configuration for each vortex generator. If configuration(i) is 'area_and_height', then the ith vortex generator planform will be a symmetric trapezoid with the endpoints of its base defined by the point1 and point2 coordinate inputs in the namelist and its area and height defined by the planform_area(i)and height(i) values. If configuration(i) is 'three_points', then the ith vortex generator will have a triangular planform where the user must supply the coordinates of a third point defining the off-surface tip of the vortex generator geometry. In this case, the planform area and height are derived quantities based on the three input point locations.

`boundary_patch1(:) = 0`

Specifies the boundary patch index for point1 of the ith vortex generator. This patch will be used for projection of the point1 coordinates specified.

`boundary_patch2(:) = 0`

Specifies the boundary patch index for point2 of the ith vortex generator. This patch will be used for projection of the point2 coordinates specified.

`planform_area(:) = 0.0`

Specifies the intended planform area of the ith vortex generator. This input only required if configuration = 'area_and_height'.

`height(:) = 0.0`

Specifies the height of the ith vortex generator. This input only required if configuration = 'area_and_height'.

`calibration_constant(:) = 0.0`

Specifies the calibration constant of the ith vortex generator.

`point1_xcoord(:) = 0.0`

Specifies the x-coordinate of point 1 defining the ith vortex generator location. These coordinates need not be precise; the input coordinates will be projected onto boundary_patch1(i).

`point1_ycoord(:) = 0.0`

Specifies the y-coordinate of point 1 defining the ith vortex generator location. These coordinates need not be precise; the input coordinates will be projected onto boundary_patch1(i).

`point1_zcoord(:) = 0.0`

Specifies the z-coordinate of point 1 defining the ith vortex generator location. These coordinates need not be precise; the input coordinates will be projected onto boundary_patch1(i).

`point2_xcoord(:) = 0.0`

Specifies the x-coordinate of point 2 defining the ith vortex generator location. These coordinates need not be precise; the input coordinates will be projected onto boundary_patch2(i).

`point2_ycoord(:) = 0.0`

Specifies the y-coordinate of point 2 defining the ith vortex generator location. These coordinates need not be precise; the input coordinates will be projected onto boundary_patch2(i).

`point2_zcoord(:) = 0.0`

Specifies the z-coordinate of point 2 defining the ith vortex generator location. These coordinates need not be precise; the input coordinates will be projected onto boundary_patch2(i).

`point3_xcoord(:) = 0.0`

Specifies the x-coordinate of point 3 defining the ith vortex generator location. This input only required if configuration = 'three_points'.

`point3_ycoord(:) = 0.0`

Specifies the y-coordinate of point 3 defining the ith vortex generator location. This input only required if configuration = 'three_points'.

`point3_zcoord(:) = 0.0`

Specifies the z-coordinate of point 3 defining the ith vortex generator location. This input only required if configuration = 'three_points'.

`reverse_t(:) = .false.`

Reverse the assumed direction of the unit vector $\hat{t}$ for the ith vortex generator.

`reverse_n(:) = .false.`

Reverse the assumed direction of the unit vector $\hat{n}$ for the ith vortex generator.

Additional information on the use of vortex generator source terms
The implementation of these source terms in FUN3D is based on the heuristic model described in [74] and previous references cited therein. The approach avoids the need for resolving geometric details of vortex generator devices during mesh generation. Sufficient grid resolution may still be required to convect the simulated effects of the vortex generator downstream as desired. The user must also provide a calibration constant for each simulated vortex generator. This value should be chosen carefully to produce the desired impact on the local flowfield. Vortex generator source terms currently may only be applied to static grid simulations. The source terms are treated fully implicit during the solution procedure.

After developing the desired set of namelist inputs, it is useful to run the solver for a single iteration, requesting boundary output for (at least) the boundaries on which vortex generators are to be placed. The geometry for each vortex generator as determined by FUN3D based on the namelist inputs will be provided in the Tecplot™ file `[project_rootname]_vg_geometry.dat`. The user should visualize the placement of each vortex generator in relation to the boundary patches of the grid to ensure the desired placement.

The user will also be provided with a Tecplot™ file `[project_rootname]_vg_vectors.dat`. This file contains the unit vectors $\hat{b}$, $\hat{t}$, and $\hat{n}$ according to the notation described in [74]. The user should visualize these vectors to ensure that they are oriented appropriately. The vector $\hat{b}$ is defined uniquely by the local boundary orientation; however, FUN3D attempts to infer the directions

of the vectors $\hat{t}$ and $\hat{n}$ based on the freestream direction. If the local flow direction is expected to be substantially different, these vectors may need to be manually reversed using the appropriate namelist inputs.

If desired, the user may also plot the points at which the actual source terms will be computed by 'scatter plotting' the data contained in the Tecplot™ file `[project_rootname]_vg_source_locations.dat`. These locations are determined by the intersections of the vortex generator geometries with edges in the grid. Source terms are computed at each of these locations then scattered to the residual values at either end of the intersecting edge.

An example of the geometry features described above and the local flowfield in the vicinity of simulated trapezoidal and triangular vortex generators near the leading edge of a wing is shown here.

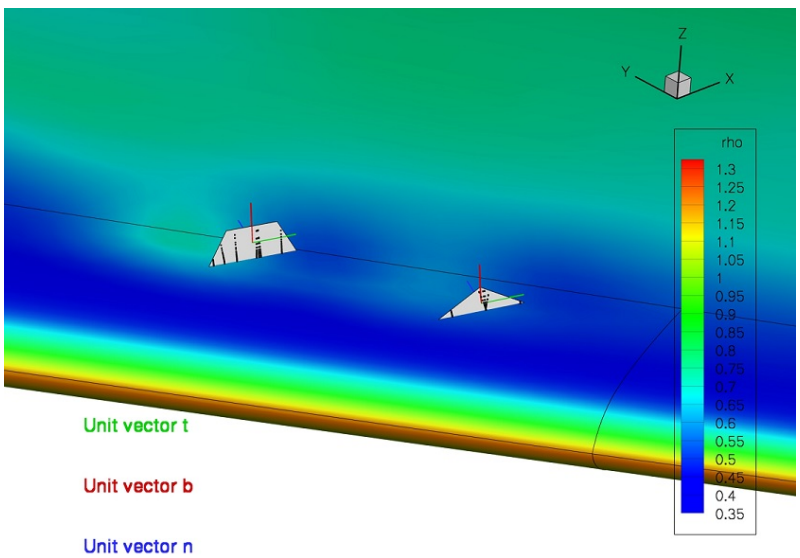

Figure B4: View of trapezoidal and triangular vortex generators placed near the leading edge of a wing geometry. The unit vectors $\hat{b}$, $\hat{t}$, and $\hat{n}$ are shown, as well as the points where the actual source terms will be computed.

B.5 `moving_body.input`

This namelist file is only used for time-dependent, moving grid cases to specify grid motion as a function of time. This file must be used in conjunction with input variable `moving_grid = .true.` in the `&global` namelist of the `fun3d.nml` input file. See section 7 for an overview of moving grid capabilities.

The grid-motion options in FUN3D are fairly generally in order to handle a wide variety of applications. The basic approach is for the user to define one or more boundaries in the grid to be a 'body'. Multiple bodies may be defined. Basic setup for these bodies is established using the `&body_definitions` namelist. A hierarchical relation may be established between multiple bodies to allow the motion of one body (a 'child') to follow the motion of another body (the 'parent'). The top level of this hierarchy is the inertial reference frame, and all motion is ultimately referenced back to this inertial frame. Each body has its own reference frame, and the reference frames of all bodies are assumed to be coincident with the inertial reference frame at t=0.

Having established the basic body definition(s), the user specifies a general descriptor (`motion_driver`) for the mechanism that will drive the motion of the body, and specifies how the mesh is to be moved - by rigid motion or by deformation (or both) - in response to the body motion. Note that mesh deformation requires more CPU time than rigid mesh motion, and is less robust. Mesh deformation may lead to negative cell volumes, at which point the solution is terminated, while rigid motion will preserve positive cell volumes. Thus, rigid mesh motion should be favored over mesh deformation whenever possible. However, there are certain situations where only a deforming mesh is appropriate. For example if the body is aeroelastic, then the mesh must be deformed to fit the deformed body surface. In some situations the potential for a deforming mesh to encounter negative cell volumes can be mitigated by combining deformation with rigid motion. An example of this is the motion of elastic rotor blades, wherein the overall rotational motion of the blades is handled via rigid rotation, but the relatively smaller elastic deflection of the blades is handled via deformation.

The `motion_driver` specification simply provides a notional mechanism for how the body is to be moved; details of this mechanism are then provided by one or more additional namelists. For example, if `motion_driver = 'forced'` then details of how to move the body, perhaps by rotation with a given frequency and amplitude, are specified via the `&forced_motion` namelist. Other options for `motion_driver` - and the required auxiliary namelists to specify the details - are given in the following sections.

By default, boundary output from FUN3D for visualization purposes (see section 5.3.1) is provided in the inertial frame. It is sometimes useful to have this output in a different reference frame, an 'observer' frame. For example, the observer frame might be one attached to a moving body. Specification of

an alternate observer frame is handled via the `&observer_motion` namelist.

See the following sections for descriptions of the namelists in this file.

B.5.1 &body_definitions

This namelist specifies which mesh surfaces define the moving bodies. In general, each body may have a different motion. However, there are some fundamental constraints. For example, in a mesh with multiple bodies undergoing different motions, either overset meshes or a deforming mesh would be required. Note that a deforming mesh might well support only small relative motions between the bodies before the mesh becomes invalid (negative cell volumes). For a single rigid mesh, all bodies within the mesh would need to have the same motion.

```
&body_definitions
  n_moving_bodies     = 0
  body_frame_forces   = .false.
  output_transform    = .false.
  dimensional_output  = .false.
  ref_velocity        = 1117.0
  ref_density         = 0.002378
  ref_length          = 1.0
  body_name(:)        = ''
  parent_name(:)      = ''
  mesh_id(:)          = 0
  n_defining_bndry(:) = 0
  defining_bndry(:,:) = 0
  motion_driver(:)    = 'none'
  mesh_movement(:)    = 'static'
  x_mc(:)             = xmc
  y_mc(:)             = ymc
  z_mc(:)             = zmc
  s_ref(:)            = sref
  c_ref(:)            = cref
  b_ref(:)            = bref
  move_mc(:)          = 1
  trim_control(:)     = 'none'
  baseline_psi(:)     = 0.0
  steps_per_period(:) = 0
/
```

`n_moving_bodies = 0`

This is the number of bodies in motion.

`body_frame_forces = .false.`

This outputs aero forces acting on the body in the frame of the body when `.true.`, rather than in the inertial reference frame.

`output_transform = .false.`

This outputs the transform matrix to `TransformMatrixBody_N.hst` for body N when `.true.`.

`dimensional_output = .false.`

This outputs the body state data (displacements, velocities, and aero forces) in dimensional form for forced or 6-DOF motions. Use with `ref_velocity`, `ref_density`, and `ref_length` to produce body state output with the desired units.

`ref_velocity = 1117.0`

This is the reference velocity to make aerodynamic forces dimensional, when `dimensional_output = .true.` Note that this should correspond to the sound speed if compressible. The default corresponds to standard sea level speed of sound, in ft/sec.

`ref_density = 0.002378`

This is the reference density to make aerodynamic forces dimensional, when `dimensional_output = .true.` The default corresponds to standard sea level density, in slugs/ft^3.

`ref_length = 1.0`

This is the reference length to make aerodynamic forces dimensional, when `dimensional_output = .true.` The default corresponds to one unit consistent with the values of `ref_velocity` and `ref_density` (i.e., 1 ft for the default reference conditions).

`body_name(:) = ''`

This is the name used to identify the body; the array index corresponds to body number.

`parent_name(:) = ''`

This is the name of the parent body; the array index corresponds to body number. The motion of a body follows (i.e., is added to) the motion of the parent. When naming the parent, `''` signifies that the parent is the inertial frame. For single or independently-moving bodies, the default `parent_name` should be used.

`mesh_id(:) = 0`

This selects the *component* mesh within the *composite* mesh to associate with this body. For example, if body 2 has `mesh_id = 1`, then motion of component mesh 1 will be governed by the motion of body 2. For non-overset cases, there is only one component, and the terms 'component' and 'composite' are synonymous.

`n_defining_bndry(:) = 0`

This is the number of boundaries that define the body; the array index corresponds to body number.

`defining_bndry(:,:) = 0`

This is a list of `n_defining_bndry` boundaries that define the body; the array index 1 corresponds to the boundary (from 1 to `n_defining_bndry`) defining the body; the array index 2 corresponds to the body number. If boundary lumping is used (section B.4.2), the boundaries must correspond to *lumped* boundaries.

`motion_driver(:) = 'none'`

This is the body motion mechanism; the array index corresponds to body number:

`'none'` is for no motion.

`'forced'` uses forced motion prescribed in `&forced_motion`.

`'surface_file'` uses surface motion prescribed in `&surface_motion_from_file`.

`'motion_file'` uses motion prescribed in `&motion_from_file`.

`'6dof'` computes motion via 6-DOF library, which is governed by `&sixdof_motion`.

`'aeroelastic'` computes motion via `&aeroelastic_modal_data`, or by coupling with an external FEM.

`'funtofem'` couples the motion with an external source via the FUNtoFEM Python interface [75].

`'custom'` uses `custom_kinematics`; the user supplies a custom transform matrix as a function of time and design variables.

`mesh_movement(:) = 'static'`

This is the type of grid movement associated with body motion; the array index corresponds to body number:

`'static'` no mesh movement.

`'rigid'` rigid mesh movement; all nodes of the mesh rotate/translate in unison with the body.

`'deform'` deforms the mesh locally to accommodate the motion of the solid body.

`'rigid+deform'` mesh undergoes both rigid and deforming motions

`x_mc(:) = xmc`

The is the x-coordinate of moment center at $t = 0$; the array index corresponds to body number.

`y_mc(:) = ymc`

This is the y-coordinate of moment center at $t = 0$; the array index corresponds to body number.

`z_mc(:) = zmc`

This is the z-coordinate of moment center at $t = 0$; the array index corresponds to body number.

`s_ref(:) = sref`

This is the nondimensional reference area for force and moment normalization; the array index corresponds to body number.

`c_ref(:) = cref`

This is the nondimensional reference chord length for force and moment normalization; the array index corresponds to body number.

`b_ref(:) = bref`

This is the nondimensional reference span length for force and moment normalization; the array index corresponds to body number.

`move_mc(:) = 1`

This controls the movement of the moment center; the array index corresponds to body number.

`'0'` leave moment center fixed in space

`'1:'` move moment center following the body number indicated by the value of `move_mc(body)` (applicable only for rigid-body motion of body `move_mc(body)`)

`trim_control(:) = 'none'`

This controls whether trim as applied to the body; the array index corresponds to body number.

`'none'` no trim control applied;

`'design'` trim control applied via design variables;

`'body_motion'` trim control applied via moving body components;

`baseline_psi(:) = 0.0`

This is the starting azimuth for trim when trim is used as a design variable; the array index corresponds to body number.

`steps_per_period(:) = 0`

This is the number of steps to define a trim period when trim is used as a design variable; the array index corresponds to body number.

B.5.2 &forced_motion

```
&forced_motion
  rotate(:)                = 0
  rotation_rate(:)         = 0.0
  rotation_freq(:)         = 0.0
  rotation_phase(:)        = 0.0
  rotation_tphase(:)       = 0.0
  rotation_amplitude(:)    = 0.0
  rotation_origin_x(:)     = 0.0
  rotation_origin_y(:)     = 0.0
  rotation_origin_z(:)     = 0.0
  rotation_vector_x(:)     = 0.0
  rotation_vector_y(:)     = 1.0
  rotation_vector_z(:)     = 0.0
  rotation_start(:)        = 0.0
  rotation_duration(:)     = 1.0e99
  translate(:)             = 0
  translation_rate(:)      = 0.0
  translation_freq(:)      = 0.0
  translation_phase(:)     = 0.0
  translation_tphase(:)    = 0.0
  translation_amplitude(:) = 0.0
  translation_vector_x(:)  = 0.0
  translation_vector_y(:)  = 0.0
  translation_vector_z(:)  = 1.0
  translation_start(:)     = 0.0
  translation_duration(:)  = 1.0e99
/
```

`rotate(:) = 0`

This is the type of rotational motion; the array index corresponds to body number:

'`:-1`' rotate to match Cl target

'`0`' for no rotation.

'`1`' for constant rotation rate, `rotation_rate`.

'`2`' is sinusoidal rotation where $\theta =$ `rotation_amplitude` $\sin(2\pi$ `rotation_freq` $t +$ `rotation_phase` $\pi/180)$ + `rotation_tphase` $\pi/180$ and t is nondimensional.

'`3`' is a square-wave doublet in rotation $\theta =$ `rotation_amplitude` for the first half of the specified `rotation_duration` and $\theta =$ `-rotation_amplitude` for the second half of the specified `rotation_duration`

`rotation_rate(:) = 0.0`

This is the nondimensional rotation rate associated with `rotate=1`; the array index corresponds to body number. For `eqn_type = 'compressible'`, the nondimensional rate is $\omega = \omega^* \frac{L^*{}_{ref}}{a^*{}_{ref} L_{ref}}$, where ω^* is the dimensional rotation rate, in rad/sec. For `eqn_type = 'incompressible'`, the nondimensional rate is $\omega = \omega^* \frac{L^*{}_{ref}}{V^*{}_{ref} L_{ref}}$; see also section 2.

`rotation_freq(:) = 0.0`

This is the nondimensional rotation reduced frequency associated with `rotate=2`; the array index corresponds to body number. For `eqn_type = 'compressible'`, the nondimensional frequency is $f = f^* \frac{L^*{}_{ref}}{a^*{}_{ref} L_{ref}}$, where f^* is the dimensional frequency, in Hertz (cycles/sec). For `eqn_type = 'incompressible'`, the nondimensional frequency is $f = f^* \frac{L^*{}_{ref}}{V^*{}_{ref} L_{ref}}$; see also section 2.

`rotation_phase(:) = 0.0`

This is the rotation phase shift (in degrees) associated with `rotate=2`; the array index corresponds to body number.

`rotation_tphase(:) = 0.0`

This is the rotation offset (in degrees) associated with `rotate=2 or 3`; the array index corresponds to body number.

`rotation_amplitude(:) = 0.0`

This is the rotation amplitude (in degrees) associated with `rotate=2 or 3`; the array index corresponds to body number.

`rotation_origin_x(:) = 0.0`

This is the x-coordinate of rotation center; the array index corresponds to body number.

`rotation_origin_y(:) = 0.0`

This is the y-coordinate of rotation center; the array index corresponds to body number.

`rotation_origin_z(:) = 0.0`

This is the z-coordinate of rotation center; the array index corresponds to body number.

`rotation_vector_x(:) = 0.0`

This is the x-component of a unit vector along the rotation axis; the array index corresponds to body number.

`rotation_vector_y(:) = 1.0`

This is the y-component of a unit vector along the rotation axis; the array index corresponds to body number.

`rotation_vector_z(:) = 0.0`

This is the z-component of a unit vector along the rotation axis; the array index corresponds to body number.

`rotation_start(:) = 0.0`

This is the nondimensional time at which the rotational motion begins the array index corresponds to body number.

`rotation_duration(:) = 1.0e99`

This is the nondimensional time over which the rotational motion is active; the array index corresponds to body number. After this time the rotational motion is zeroed out.

`translate(:) = 0`

This is the type of translational motion; the array index corresponds to body number:

`'0'` for no translation.

`'1'` for a constant translation rate, `translation_rate`.

`'2'` is sinusoidal translation where displacement = `translation_amplitude` $\sin(2\pi$ `translation_freq` $t +$ `translation_phase` $\pi/180) +$ `translation_tphase` $\pi/180$ and t is nondimensional.

`translation_rate(:) = 0.0`

This is the nondimensional translation rate associated with `translate=1`; the array index corresponds to body number. For `eqn_type = 'compressible'`, the nondimensional translation rate is $V = V^*/a^*_{ref}$, where V^* is the dimensional translation rate (for example, in ft/sec). For `eqn_type = 'incompressible'`, the nondimensional translation rate is $V = V^*/V^*_{ref}$; see also section 2.

`translation_freq(:) = 0.0`

This is the nondimensional translation reduced frequency associated with `translate=2`; the array index corresponds to body number. For `eqn_type = 'compressible'`, the nondimensional frequency is $f = f^* \frac{L^*_{ref}}{a^*_{ref} L_{ref}}$, where f^* is the dimensional frequency, in Hertz (cycles/sec). For `eqn_type = 'incompressible'`, the nondimensional frequency is $f = f^* \frac{L^*_{ref}}{V^*_{ref} L_{ref}}$; see also section 2.

`translation_phase(:) = 0.0`

This is the translation phase shift (in degrees) associated with `translate=2`; the array index corresponds to body number.

`translation_tphase(:) = 0.0`

This is the translation offset (in grid units) associated with `translate=2`; the array index corresponds to body number.

`translation_amplitude(:) = 0.0`

This is the translation amplitude (in grid units) associated with `translate=2`; the array index corresponds to body number.

`translation_vector_x(:) = 0.0`

This is the x-component of a unit vector along the translation axis; the array index corresponds to body number.

`translation_vector_y(:) = 0.0`

This is the y-component of a unit vector along the translation axis; the array index corresponds to body number.

`translation_vector_z(:) = 1.0`

This is the z-component of a unit vector along the translation axis; the array index corresponds to body number.

`translation_start(:) = 0.0`

This is the nondimensional start time of the translational motion; the array index corresponds to body number.

`translation_duration(:) = 1.0e99`

This is the nondimensional duration of the translational motion; the array index corresponds to body number.

B.5.3 &observer_motion

This namelist specifies motion of an observer as a function of time for boundary animation purposes (see the `&boundary_output_variables` namelist for more details); the animation is output from the point of view of the observer.

```
&observer_motion
  ob_parent_name           = ''
  ob_rotate                = 0
  ob_rotation_rate         = 0.0
  ob_rotation_freq         = 0.0
  ob_rotation_phase        = 0.0
  ob_rotation_tphase       = 0.0
  ob_rotation_amplitude    = 0.0
  ob_rotation_origin_x     = 0.0
  ob_rotation_origin_y     = 0.0
  ob_rotation_origin_z     = 0.0
  ob_rotation_vector_x     = 0.0
  ob_rotation_vector_y     = 1.0
  ob_rotation_vector_z     = 0.0
  ob_translate             = 0
  ob_translation_rate      = 0.0
  ob_translation_freq      = 0.0
  ob_translation_phase     = 0.0
  ob_translation_tphase    = 0.0
  ob_translation_amplitude = 0.0
  ob_translation_vector_x  = 0.0
  ob_translation_vector_y  = 0.0
  ob_translation_vector_z  = 1.0
/
```

`ob_parent_name = ''`

This is the observer parent reference frame. The default indicates the inertial reference frame - the same as when observer motion is not explicitly specified. `ob_parent_name` can alternatively be set to any moving body defined in the `&body_definitions` namelist. For articulated, moving-blade rotorcraft cases, for which `overset_rotor=.true.`, special observer reference frames, fixed to the motion of the rotor hub are available. These special observer frames are activated by setting `ob_parent_name='rotor_hub_N'`, where N is the rotor number.

`ob_rotate = 0`

This is the type of rotational motion of the observer fame, *to be applied relative to the* `ob_parent_name` *reference frame*:

`'0'` for no rotation.

'1' for a constant rotation rate, ob_rotation_rate.

'2' is sinusoidal rotation where $\theta =$ ob_rotation_amplitude $\sin(2\pi$ ob_rotation_freq $t +$ ob_rotation_phase $\pi/180)$ and t is nondimensional.

ob_rotation_rate = 0.0

This is the nondimensional rotation rate associated with rotate=1. For eqn_type = 'compressible', the nondimensional rate is $\omega = \omega^* \frac{L^*_{ref}}{a^*_{ref} L_{ref}}$, where ω^* is the dimensional rotation rate, in rad/sec. For eqn_type = 'incompressible', the nondimensional rate is $\omega = \omega^* \frac{L^*_{ref}}{V^*_{ref} L_{ref}}$; see also section 2.

ob_rotation_freq = 0.0

This is the nondimensional rotation reduced frequency associated with rotate=2.

ob_rotation_phase = 0.0

This is the rotation phase shift (in degrees) associated with rotate=2.

ob_rotation_tphase = 0.0

This is the rotation phase shift (in degrees) applied to transform matrix.

ob_rotation_amplitude = 0.0

This is the rotation amplitude (in degrees) associated with rotate=2.

ob_rotation_origin_x = 0.0

This is the x-coordinate of rotation center.

ob_rotation_origin_y = 0.0

This is the y-coordinate of rotation center.

ob_rotation_origin_z = 0.0

This is the z-coordinate of rotation center.

ob_rotation_vector_x = 0.0

This is the x-component of a unit vector along the rotation axis.

ob_rotation_vector_y = 1.0

This is the y-component of a unit vector along the rotation axis.

ob_rotation_vector_z = 0.0

This is the z-component of a unit vector along the rotation axis.

ob_translate = 0

This is the type of translational motion:

`'0'` for no translation

`'1'` for constant translation rate, `ob_translate_rate`.

`'2'` is sinusoidal translation where displacement = `ob_translation_amplitude` $\sin(2\pi$ `ob_translation_freq` t + `ob_translation_phase` $pi/180)$ and t is nondimensional.

`ob_translation_rate = 0.0`

This is the nondimensional translation rate associated with `translate=1`. For `eqn_type = 'compressible'`, the nondimensional translation rate is $V = V^*/a^*_{ref}$, where V^* is the dimensional translation rate (for example, in ft/sec). For `eqn_type = 'incompressible'`, the nondimensional translation rate is $V = V^*/V^*_{ref}$; see also section 2.

`ob_translation_freq = 0.0`

This is the nondimensional translation reduced frequency associated with `translate=2`. For `eqn_type = 'compressible'`, the nondimensional frequency is $f = f^* \frac{L^*_{ref}}{a^*_{ref} L_{ref}}$, where f^* is the dimensional frequency, in Hertz (cycles/sec). For `eqn_type = 'incompressible'`, the nondimensional frequency is $f = f^* \frac{L^*_{ref}}{V^*_{ref} L_{ref}}$; see also section 2.

`ob_translation_phase = 0.0`

This is the translation phase shift (in degrees) associated with `translate=2`.

`ob_translation_tphase = 0.0`

This is the translation phase shift (in degrees) applied to transform matrix.

`ob_translation_amplitude = 0.0`

This is the translation amplitude (in grid units) associated with `translate=2`.

`ob_translation_vector_x = 0.0`

This is the x-component of a unit vector along the translation axis.

`ob_translation_vector_y = 0.0`

This is the y-component of a unit vector along the translation axis.

`ob_translation_vector_z = 1.0`

This is the z-component of a unit vector along the translation axis.

B.5.4 &motion_from_file

This namelist specifies *rigid* body (and grid) motion via a file containing a 4x4 transform matrix as a function of time. It allows user-defined motion that is more general than the motions available in the `&forced_motion` namelist.

```
&motion_from_file
  n_time_slices_file(:) = 0
  repeat_time_file(:)   = 1.0e+99
  motion_file(:)        = ''
  motion_file_type(:)   = 'transform_matrix'
/
```

`n_time_slices_file(:) = 0`

This is the number of transforms (at selected points in time) defining the motion of the body; the array index corresponds to body number. All the transforms for a particular body are contained in a single file.

`repeat_time_file(:) = 1.0e+99`

This is the nondimensional time when the motion will repeat; the array index corresponds to body number.

`motion_file(:) = ''`

This is the name of the ASCII file that contains the transform matrices used to set the grid position and orientation of the body for each of the specified instants in time; the array index corresponds to body number. The following pseudo code illustrates how such a motion file might be created:

loop over time steps
write() `simulation_time`
write() `xcg`, `ycg`, `zcg`
do i=1,4
write() `transform_matrix(i,j)`, j=1,4)
end do
end time step loop

where `simulation_time` is the nondimensional time, and where `xcg`,`ycg`,`zcg` are the coordinates of the center of gravity of the body (which is also the rotation center) in grid units.

Note: the file must have 9 (nine) text lines (can be blank) before the data for the first time step. If you need an example of how this file should appear, run a moving-grid case using forced motion with `output_transform = .true.` in the `&body_definitions` namelist. The resulting transform output files are exactly the same format as the input files associated with `motion_file`.

`motion_file_type(:) = 'transform_matrix'`

This is the type of transform matrix specified; the array index corresponds to body number:

`'transform_matrix'` a 4x4 matrix that specifies the transform from the body position at time t=0 (i.e. the position in the input grid file) to the current position at time t=T.

`'inverse_transform'` a 4x4 matrix that specifies the transform from the current body position (in motion) at time t=T to the body position at time t=0 (the position in the input grid file).

B.5.5 &surface_motion_from_file

This namelist allows the motion of surface grids to be defined in files. Since only the surface is specified, `mesh_movement = 'deform'` must be used to deform the volume mesh to conform to the specified surface. These files must be named `[project_rootname]_bodyN_timestepM.dat`, where N is the body number and M is the time slice index (1 to `n_time_slices`). The files are ASCII Tecplot files with a zone title line that contains "TIME `simulation_time`", where `simulation_time` is nondimensional time. The variables in the file are the values of `x`, `y`, `z`, as well as `id`, where `id` is the global grid number of the surface point.

```
&surface_motion_from_file
  n_time_slices(:) = 0
  repeat_time(:)   = 1.0e+99
/
```

`n_time_slices(:) = 0`

This is the number of equally spaced instants in time (and files describing the shape at those times) defining the motion of the body; the array index corresponds to body number. Each file contains the surface shape at a point in time.

`repeat_time(:) = 1.0e+99`

This is the nondimensional time when the motion will repeat; the array index corresponds to body number.

B.5.6 &sixdof_motion

This namelist provides details of 6-DOF motion simulations. It requires linking to the 6-DOF library, see section A.8.6. NOTE: most data in this namelist is input as *dimensional* data. For 6-DOF motion, the variables `ref_velocity`, `ref_density` and `ref_length` in the namelist `&body_definitions` must also be set, in units consistent with those used in `&sixdof_motion`. Note (important): data are assumed to be in FUN3D body coordinates, which are the FUN3D coordinates at t=0. Note that the assumption of FUN3D coordinates applies to the moments of inertia.

```
&sixdof_motion
  mass(:)                      = 1.0
  cg_x(:)                      = 0.0
  cg_y(:)                      = 0.0
  cg_z(:)                      = 0.0
  i_xx(:)                      = 1.0
  i_yy(:)                      = 1.0
  i_zz(:)                      = 1.0
  i_xy(:)                      = 0.0
  i_xz(:)                      = 0.0
  i_yz(:)                      = 0.0
  body_lin_vel(:,:)            = 0.0
  body_ang_vel(:,:)            = 0.0
  euler_ang(:,:)               = 0.0
  gravity_dir(1:3)             = 0.0, 0.0, -1.0
  gravity_mag                  = 32.2
  n_extforce(:)                = 0
  n_extmoment(:)               = 0
  file_extforce(:,:)           = ''
  file_extmoment(:,:)          = ''
  ignore_x_aeroforce(:)        = .false.
  ignore_y_aeroforce(:)        = .false.
  ignore_z_aeroforce(:)        = .false.
  ignore_x_aeromoment(:)       = .false.
  ignore_y_aeromoment(:)       = .false.
  ignore_z_aeromoment(:)       = .false.
  print_sixdof_summary         = .false.
  use_specified_aero_data      = .false.
  use_restart_mass_properties = .false.
/
```

`mass(:) = 1.0`

This is the mass of the body; the array index corresponds to the body number.

`cg_x(:) = 0.0`

This is the x-coordinate of the center of gravity; the array index corresponds to the body number.

`cg_y(:) = 0.0`

This is the y-coordinate of the center of gravity; the array index corresponds to the body number.

`cg_z(:) = 0.0`

This is the z-coordinate of the center of gravity; the array index corresponds to the body number.

`i_xx(:) = 1.0`

This is the moment of inertia about the x axis as the body rotates about the x axis; the array index corresponds to the body number.

`i_yy(:) = 1.0`

This is the moment of inertia about the y axis as the body rotates about the y axis; the array index corresponds to the body number.

`i_zz(:) = 1.0`

This is the moment of inertia about the z axis as the body rotates about the z axis; the array index corresponds to the body number.

`i_xy(:) = 0.0`

This is the moment of inertia about the x axis as the body rotates about the y axis; the array index corresponds to the body number.

`i_xz(:) = 0.0`

This is the moment of inertia about the x axis as the body rotates about the z axis; the array index corresponds to the body number.

`i_yz(:) = 0.0`

This is the moment of inertia about the y axis as the body rotates about the z axis; the array index corresponds to the body number.

`body_lin_vel(:,:) = 0.0`

These are the components of linear velocity; The first array index (ranging from 1 to 3) corresponds to the x, y, and z components; The second array index corresponds to the body number.

`body_ang_vel(:,:) = 0.0`

These are the components of angular velocity (degrees/sec); The first array index (ranging from 1 to 3) corresponds to the x, y, and z components; The second array index corresponds to the body number.

`euler_ang(:,:) = 0.0`

These are the Euler angles (degrees); The first array (ranging from 1 to 3) corresponds to the rotation angle components; the second array index corresponds to the body number.

`gravity_dir(1:3) = 0.0, 0.0, -1.0`

This is a unit length gravity vector.

`gravity_mag = 32.2`

This is the magnitude of the gravity vector (default units: ft/sec^2).

`n_extforce(:) = 0`

This is the number of imposed external forces, excluding gravity. The array index corresponds to the body number.

`n_extmoment(:) = 0`

This is the number of imposed external moments; the array index corresponds to the body number.

`file_extforce(:,:) = ''`

This file specifies the external forces; the first array (ranging from 1 to `n_extforce`) corresponds to the external force number. The second array index corresponds to the body number.

`file_extmoment(:,:) = ''`

This file specifies the external moments; the first array (ranging from 1 to `n_extforce`) corresponds to the external force number. The second array index corresponds to the body number.

`ignore_x_aeroforce(:) = .false.`

Flag to ignore the influence of the x-component of the aerodynamic force on the 6-DOF motion of the body; the array index corresponds to the body number.

`ignore_y_aeroforce(:) = .false.`

Flag to ignore the influence of the y-component of the aerodynamic force on the 6-DOF motion of the body; the array index corresponds to the body number.

`ignore_z_aeroforce(:) = .false.`

Flag to ignore the influence of the z-component of the aerodynamic force on the 6-DOF motion of the body; the array index corresponds to the body number.

`ignore_x_aeromoment(:) = .false.`

Flag to ignore the influence of the x-component of the aerodynamic moment on the 6-DOF motion of the body; the array index corresponds to the body number.

`ignore_y_aeromoment(:) = .false.`

Flag to ignore the influence of the y-component of the aerodynamic moment on the 6-DOF motion of the body; the array index corresponds to the body number.

`ignore_z_aeromoment(:) = .false.`

Flag to ignore the influence of the z-component of the aerodynamic moment on the 6-DOF motion of the body; the array index corresponds to the body number.

`print_sixdof_summary = .false.`

Print out a summary of the 6-DOF data for each body at each time step, from within the 6-DOF solver itself; useful for verifying that the 6-DOF library is getting the correct data from FUN3D

`use_specified_aero_data = .false.`

Use aero forces and moments read from file(s) instead of the computed values (used for validating 6-DOF library implementation). When this option is used, files must be specified for ALL bodies moving under 6-DOF. For body N, the file name must be named `specified_aero_data_bodyN.dat`

`use_restart_mass_properties = .false.`

Use mass and moments of inertia from the FUN3D restart file instead of those in this namelist; only needed FUN3D has modified the mass and inertia during the simulation.

B.5.7 &aeroelastic_modal_data

This namelist specifies data for modal static and dynamic aeroelastic analysis via time integration of the structural dynamics equations (see for example [76]).

```
&aeroelastic_modal_data
  nfsi_subiters               = 1
  grefl                       = 1.0
  uinf                        = 0.0
  qinf                        = 0.0
  fsi_coord_tol               = 1.e-8
  genforce_include_shear      = .false.
  time_integration_scheme     = 'PC_2ndorder'
  nmode(:)                    = 0
  plot_modes                  = .false.
  gdisp0(:,:)                 = 0.0
  gvel0(:,:)                  = 0.0
  gforce0(:,:)                = 0.0
  gmass(:,:)                  = 0.0
  freq(:,:)                   = 0.0
  damp(:,:)                   = 0.0
  moddfl(:,:)                 = 0
  moddfl_amp(:,:)             = 0.0
  moddfl_freq(:,:)            = 0.0
  moddfl_t0(:,:)              = 0.0
  moddfl_add(:,:)             = 0
  modal_ae_complex_to_perturb = 0
  modal_ae_complex_epsilon    = 1.e-20
  modal_ae_mode_to_perturb    = 1
  modal_ae_body_to_perturb    = 1
/
```

`nfsi_subiters = 1`

This sets the number of fluid-structure subiterations to perform at each time step. Mesh deformation is required for each fluid-structure subiteration, which makes these subiterations expensive in terms of execution time.

`grefl = 1.0`

This is the scaling factor between CFD grid units and the structural dynamics equation units. Note: `grefl` is now a scalar value; versions prior to 13.1 required an array value.

`uinf = 0.0`

This is the freestream velocity, in structural dynamics equation units. Note: `uinf` is now a scalar value; versions prior to 13.1 required an array value.

`qinf = 0.0`

This is the freestream dynamic pressure, in structural dynamics equation units. Note: `qinf` is now a scalar value; versions prior to 13.1 required an array value.

`fsi_coord_tol = 1.e-8`

This specifies the tolerance used to determine whether a point on the fluid side of the FSI interface (defined by one or more boundaries in the grid) has a matching point on the structure side of the interface (defined in the mode-shape files). There must be a 1-1 correspondence, to within this tolerance. If the code stops with an error 'failed to find unique mapping...', try increasing this tolerance.

`genforce_include_shear = .false.`

This includes the shear-stress contribution in the generalized force computation. By default, only the pressure contribution is included in the generalized forces, which is historically common practice.

`time_integration_scheme = 'PC_2ndorder'`

This prescribes the temporal integration scheme for the linear structural dynamics equations.

`'PC_2ndorder'` Uses the traditional second-order accurate predictor-corrector scheme described in [76] to advance the linear structural dynamics equations. Two 'subiterations' are used, the first being the predictor step and the second the corrector step.

`'BDF_1storder'` Uses a first-order backward differencing scheme (backward Euler) to advance the linear structural dynamics equations. This scheme and all the other BDF schemes are subject to the same the number of flow `subiterations` as used for the flow solver.

`'BDF_2ndorder'` Uses a second-order backward differencing scheme to advance the linear structural dynamics equations.

`'BDF_2ndorderOPT'` Uses an optimized second-order backward differencing scheme (BDF2opt in [55]) to advance the linear structural dynamics equations. This scheme is second-order accurate in time but has an order-of-magnitude lower leading coefficient than standard BDF2.

`'BDF_3rdorder'` Uses a third-order backward differencing scheme to advance the linear structural dynamics equations.

`nmode(:) = 0`

This is the number of aeroelastic modes used to represent the structural deformation; the array index indicates the body number.

`plot_modes = .false.`

This generates tecplot files of each mode shape added to the body surface. These can be inspected these to insure the validity of input modal surface data.

`gdisp0(:,:) = 0.0`

This is the generalized displacement of a specified mode at the starting time step. It is used to perturb a mode to excite a dynamic response. The first array index indicates the mode number and the second array index indicates the body number.

`gvel0(:,:) = 0.0`

This is the generalized velocity of a specified mode at the starting time step. It is used to perturb a mode to excite a dynamic response. The first array index indicates the mode number and the second array index indicates the body number.

`gforce0(:,:) = 0.0`

This is the generalized force of a specified mode at the starting time step. It is used to perturb a mode to excite a dynamic response. The first array index indicates the mode number and the second array index indicates the body number.

`gmass(:,:) = 0.0`

This is the generalized mass of a specified mode. The first array index indicates the mode number and the second array index indicates the body number.

`freq(:,:) = 0.0`

This is the frequency of specified mode, in rad/sec. The first array index indicates the mode number and the second array index indicates the body number.

`damp(:,:) = 0.0`

This is the critical damping ratio (z) of the specified mode. The first array index indicates the mode number and the second array index indicates the body number.

`moddfl(:,:) = 0`

This is the type of time-varying mode perturbation. The first array index indicates the mode number and the second array index indicates the body number.

`'-1'` is the modal displacement and velocity held fixed at the initial values specified by `gdisp0` and `gvel0`, respectively.

`'0'` is no modal perturbation.

`'1'` is a harmonic modal oscillation.

`'2'` is a Gaussian pulse modal deflection.

`'3'` is a step pulse modal deflection.

`'5'` specifies simultaneous inputs for reduced order model.

`moddfl_amp(:,:) = 0.0`

This is the amplitude of mode perturbation. The first array index indicates the mode number and the second array index indicates the body number.

`moddfl_freq(:,:) = 0.0`

This is the frequency of mode perturbation. If `moddfl=2`, it is the Gaussian pulse half-life. The first array index indicates the mode number and the second array index indicates the body number.

`moddfl_t0(:,:) = 0.0`

If `moddfl=1`, this is the dimensional time at which the sinusoidal perturbation starts. If `moddfl=2`, this is the dimensional time of the center of the Gaussian pulse. If `moddfl=3`, this is the start time of a step pulse. The first array index indicates the mode number and the second array index indicates the body number.

`moddfl_add(:,:) = 0`

This determines how the modal perturbation is applied. The first array index indicates the mode number and the second array index indicates the body number.

`'0'` replaces the perturbation with the static aeroelastic solution.

`'1'` adds the perturbation to an existing static aeroelastic solution (if one exists).

`modal_ae_complex_to_perturb = 0`

This value selects from a list of available modal-aeroelastic related complex perturbations for generating sensitivities. Note: depending on the selected value of `modal_ae_complex_to_perturb`, one may also need to specify a particular mode to perturb and a particular body to perturb via `modal_ae_mode_to_perturb` and `modal_ae_body_to_perturb`, respectively.

`'0'` No complex-valued perturbation applied

`'1'` Perturb the freestream dynamic pressure, qinf

`'2'` Perturb the freestream velocity, uinf

`'3'` Perturb the structural damping of mode `modal_ae_mode_to_perturb` for body number `modal_ae_body_to_perturb`

`'4'` Perturb the frequency of mode `modal_ae_mode_to_perturb` for body number `modal_ae_body_to_perturb`

`'5'` Perturb the generalized mass of mode `modal_ae_mode_to_perturb` for body number `modal_ae_body_to_perturb`

`'6'` Perturb the generalized velocity of mode `modal_ae_mode_to_perturb` for body number `modal_ae_body_to_perturb`

`'7'` Perturb the generalized displacement of mode `modal_ae_mode_to_perturb` for body number `modal_ae_body_to_perturb`

`modal_ae_complex_epsilon = 1.e-20`

This is the size of the complex perturbation to apply.

`modal_ae_mode_to_perturb = 1`

This is the mode to be perturbed.

`modal_ae_body_to_perturb = 1`

This is the body with the mode that is to be perturbed.

B.5.8 &composite_overset_mesh

This namelist provides the input for SUGGAR++ (see the documentation supplied with SUGGAR++ for details).

```
&composite_overset_mesh
  input_xml_file = ''
/
```

`input_xml_file = ''`

This is the file containing the XML commands for SUGGAR++. Specify the same `Input.xml` file that was used to generate the initial composite grid with the "stand-alone" SUGGAR++ code.

B.6 `rotor.input`

FUN3D is capable of modeling a rotating blade system using different levels of approximation. In order of increasing complexity/fidelity/cost, rotor systems may be analyzed using either a time-averaged actuator disk, or via first principles modeling of the moving, articulated, rotor blades using overset, moving grids. The actuator method utilizes momentum/energy source terms to represent the influence of the rotating blade system. Use of the source terms simplifies grid generation, since the actuator surfaces do not need to be built into the computational grid. However, the computational grid should have some refinement in the vicinity of the actuator surfaces to obtain accurate results. The steady-state actuator disk capability was originally implemented by Dave O'Brien, at the time a PhD candidate at Georgia Tech. [77] O'Brien also initiated the overset capability in FUN3D, which was later extended and coupled to a rotorcraft comprehensive code by Biedron et al. [78]

The rotor.input file is used primarily for specifying input quantities related to an actuator surface model for rotor/propeller combinations. When using overset, moving grids and/or coupling FUN3D to a rotorcraft comprehensive code for a more detailed simulation, a limited number of the input fields in the `rotor.input` file are also required. The fields required for coupled rotorcraft simulations include *(required for coupled simulation)* in the variable description. The command line option `--rotor` is required for both types of analysis.

FUN3D can also use the actuator disk library developed by Dave O'Brien for the Department of Defense HI-ARMS/CREATE/HELIOS project, Software Module for Engineering Methods of Rotor Dynamics (SMEMRD). The FUN3D team is unable to provide technical support for SMEMRD; please contact Dave O'Brien directly for assistance (David.ObrienJr@us.army.mil). SMEMRD adds the ability to trim to thrust values and use airfoil lookup tables. Use the `&hiarms_actuator_disk` namelist to activate the SMEMRD model.

The two parameters used to set the flight condition and force/moment coefficient normalization in compressible rotorcraft simulations are `mach_number` in `fun3d.nml` and `Vinf_Ratio` in `rotor.input`. To nondimensionalize the forces with the rotor tip velocity, set `mach_number` to the tip mach number and `Vinf_Ratio` to the ratio of freestream velocity to rotor tip velocity. When `mach_number` is the tip mach number then `reynolds_number` should be set to the corresponding tip Reynolds number. To nondimensionalize the forces with the freestream velocity, set `mach_number` to the freestream mach number and `Vinf_Ratio` to one. The `Vinf_Ratio` will still affect the force nondimensionalization as described above, for incompressible solutions.

A sample `rotor.input` file is shown below for a conventional main rotor and tail rotor helicopter.

```
  # Rotors  Vinf_Ratio  Write Soln   Force_ref  Moment_ref
         2         0.1          50         1.0         1.0
=== Main Rotor ========================================================
Rotor Type   Load Type    # Radial    # Normal  Tip Weight
         1           0          50         720         0.0
  X0_rotor    Y0_rotor    Z0_rotor        phi1        phi2        phi3
      0.00        0.00        0.00        0.00       -5.00        0.00
  Vt_Ratio  ThrustCoff  TorqueCoff        psi0  PitchHinge      DirRot
      1.00       0.005        0.00        0.00         0.0           0
  # Blades   TipRadius  RootRadius  BladeChord   FlapHinge    LagHinge
         4        1.00        0.00        0.05        0.00        0.00
 LiftSlope  alpha, L=0         cd0         cd1         cd2
      6.28        0.00       0.002        0.00        0.00
    CL_max      CL_min      CD_max      CD_min       Swirl
      1.50       -1.50        1.50       -1.50           0
    Theta0  ThetaTwist     Theta1s     Theta1c  Pitch-Flap
      5.00       -2.00        0.00        0.00        0.00
 # FlapHar       Beta0      Beta1s      Beta1c
         0        0.00        0.00        0.00
    Beta2s      Beta2c      Beta3s      Beta3c
      0.00        0.00        0.00        0.00
  # LagHar      Delta0     Delta1s     Delta1c
         0        0.00        0.00        0.00
   Delta2s     Delta2c     Delta3s     Delta3c
      0.00        0.00        0.00        0.00
=== Tail Rotor ========================================================
Rotor Type   Load Type    # Radial    # Normal  Tip Weight
         1           0         100         720         0.0
  X0_rotor    Y0_rotor    Z0_rotor        phi1        phi2        phi3
      1.00        0.00        0.00       90.00        0.00        0.00
  Vt_Ratio  ThrustCoff  TorqueCoff        psi0  PitchHinge      DirRot
      1.25       0.001        0.00        0.00         0.0           0
  # Blades   TipRadius  RootRadius  BladeChord   FlapHinge    LagHinge
         3        0.20        0.00        0.01        0.00        0.00
 LiftSlope  alpha, L=0         cd0         cd1         cd2
      6.28        0.00       0.002        0.00        0.00
    CL_max      CL_min      CD_max      CD_min       Swirl
      1.50       -1.50        1.50       -1.50           1
    Theta0  ThetaTwist     Theta1s     Theta1c  Pitch-Flap
      8.00        0.00        0.00        0.00        0.00
 # FlapHar       Beta0      Beta1s      Beta1c
         0        0.00        0.00        0.00
    Beta2s      Beta2c      Beta3s      Beta3c
      0.00        0.00        0.00        0.00
  # LagHar      Delta0     Delta1s     Delta1c
         0        0.00        0.00        0.00
   Delta2s     Delta2c     Delta3s     Delta3c
      0.00        0.00        0.00        0.00
```

The header line is where the user specifies the number of rotors, the freestream velocity ratio, and how often to output the plot3d loading file. The remainder of the file is in a block structure, where each block represents the inputs for one rotor. The first line of each block is a text line that can be edited to keep the rotors organized for the user. The input values do not have to be in a fixed format (spaces and number of decimal points do not matter), but the input values do have to be in the correct order as noted by the header lines for the individual input parameters.

B.6.1 Header

`# Rotors` *(required for coupled simulation)*

This is the number of actuator surfaces to create. The number of rotor input blocks in this file must match the number of rotors specified.

`Vinf_Ratio` *(required for coupled simulation)*

This is the ratio of the freestream velocity to the the velocity used for force normalization. The force normalization velocity is typically the tip velocity for rotorcraft applications.

`Write Soln`

This is the frequency (in iterations) of Plot3D rotor loading data output, which is pairs of `source_grid_00000.p3d` and `source_data_00000.p3d` files. To write once, set `Write Soln` to `steps`.

`Force_ref`

This is the conversion factor to obtain forces in alternate units,

1.0 will output the standard FUN3D nondimensionalization

$(L_{ref}^2 a_{ref}^2)/(\pi R_{rotor}^2 V_{tip}^2)$ will output standard rotorcraft nondimensionalization

$\rho_{ref} a_{ref}^2 L_{ref}^2$ will output dimensional units

`Moment_ref`

This is the conversion factor to obtain moments in alternate units.

1.0 will output the standard FUN3D nondimensionalization

$(L_{ref}^2 a_{ref}^3)/(\pi R_{rotor}^3 V_{tip}^2)$ will output standard rotorcraft nondimensionalization

$\rho_{ref} a_{ref}^2 L_{ref}^3$ will output dimensional units

B.6.2 Actuator Surface Model

`Rotor Type`

Type of rotor model to apply,

1 models the rotor as an actuator disk.

2 models the rotor as actuator blades.

`Load Type`

Type of loading to apply to the rotor model.

1 is a pressure jump based on `ThrustCoeff` that is constant over the disk. This loading does not model swirl.

2 is a pressure jump based on `ThrustCoeff` that increases linearly with radius. This loading does not model swirl.

3 is blade element based loading based defined by the blade element parameters defined in section B.6.6 and section B.6.7. This loading can model swirl if `Swirl=1`.

4 is user-specified source geometry and strength. Not recommended unless you have experience in actuator disk modeling. See the subroutine `read_user_source2` in `LibF90/rotors.f90` for input format.

5 is user specified thrust and torque radial distributions in the file `propeller_propertiesN.dat`, where `N` is the rotor index. The first line of the file is the number of radial stations. The following lines have three numbers per station, with r/R, $dC_T/d(r/R)$, $dC_Q/d(r/R)$. This file sets the thrust and torque loading directly, so `ThrustCoeff` and `TorqueCoeff` are ignored. This loading can model swirl if `Swirl=1`.

6 is a body force based on on the optimal distribution of Goldstein [79] implemented as described by Stern, Kim, and Patel. [80] Use `ThrustCoeff` to set the thrust and `TorqueCoeff` to produce swirl (with `Swirl=1`).

`# Radial`

This is the number of sources to distribute along the blade radius. This should be set to approximately match the resolution of the volume grid, otherwise a suggested value is 100.

`# Normal`

This is the number of sources to distribute along the circumferential direction. This should be set to approximately match the resolution of the volume grid. For `Rotor Type=1`, 720 is suggested for a source every 0.5 degrees. For `Rotor Type=2`, 20 points in the chord direction is suggested.

`Tip Weight`

This is the hyperbolic weighting factor for distributing sources along the blade radius. A suggested value is 0.0, which yields uniform distribution. A value larger than 2.0 is not advised because it places too many sources at the blade tip.

B.6.3 Rotor Reference System

`X0_rotor` *(required for coupled simulation)*

This is the x coordinate of the hub center of rotation, in grid units.

`Y0_rotor` *(required for coupled simulation)*

This is the y coordinate of the hub center of rotation, in grid units.

`Z0_rotor` *(required for coupled simulation)*

This is the z coordinate of the hub center of rotation, in grid units.

`phi1`

This is the first Euler angle describing a rotation about the x axis, in degrees. For a propeller oriented in the x-positive direction, this should be 0.

`phi2`

This is the second Euler angle describing a rotation about the a_2 axis, in degrees. For a propeller oriented in the x-positive direction, this should be -90.

`phi3`

This is the third Euler angle describing a rotation about the b_3 axis, in degrees. For a propeller oriented in the x-positive direction, this should be 0.

The Euler angles must be input correctly to obtain the correct orientation of the source based actuator disk. The following example illustrates how to determine these angles. Figure B5 depicts the rotations `phi1` $= 10$, `phi2` $= -15$, and `phi3` $= 15$. Initially, the thrust is assumed to be in the z direction and the disk is located in the $x - y$ plane. The first rotation of `phi1` about the x axis takes the $x - y - z$ system to the $a_1 - a_2 - a_3$ system shown in red. The second rotation of `phi2` about the a_2 axis takes the $a_1 - a_2 - a_3$ system to the $b_1 - b_2 - b_3$ system shown in green. The final rotation of `phi3` about the b_3 axis takes the $b_1 - b_2 - b_3$ system to the rotor reference system shown in blue. The black circle represents the initial disk orientation and the blue circle represents the final disk orientation. In general `phi1` and `phi2` are sufficient to define the thrust orientation. The variable `phi3` only changes the location of the zero azimuth angle definition for the rotor.

B.6.4 Rotor Loading

`Vt_Ratio` *(required for coupled simulation)*

This is the ratio of the tip speed to the velocity used for force normalization, which is `mach_number` for compressible simulations. For

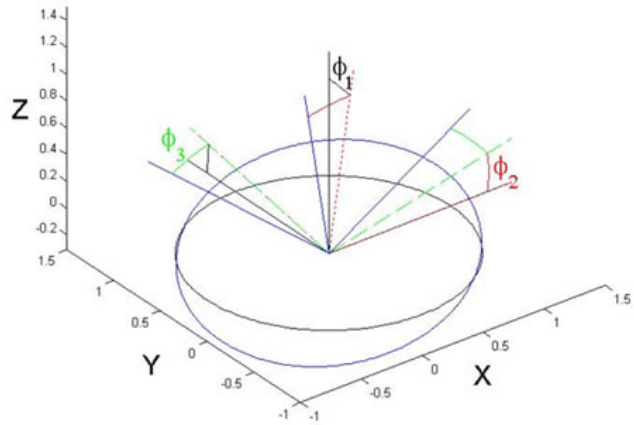

Figure B5: Rotor disk Euler angles.

`Load Type = 3`, `Load Type = 5`, and `Load Type = 6` a negative value will reverse the rotation direction. The propeller convention is $J = \frac{V_a}{nD}$, where V_a is speed of advance (true airspeed), n is revolutions per unit time, and D is diameter, i.e, `Vt_Ratio`$= \frac{\pi}{J}$.

`ThrustCoff`

This is the rotor thrust coefficient defined as, $C_T =$ Thrust / $(\pi \rho_{ref} R^2 (\Omega_{Dim} R)^2)$, when `Load Type`=1, `Load Type`=2, or `Load Type`=6. The blade element model does not trim to specified thrust coefficient. The propeller convention is $K_T =$ Thrust / $(\rho_{ref} n^2 D^4)$, where n is revolutions per unit time, and D is diameter, i.e, `ThrustCoff`$= \frac{4}{\pi^3} K_T$.

`TorqueCoff`

This is the rotor torque coefficient defined as, $C_Q =$ Torque / $(\pi \rho_{ref} R^3 (\Omega_{Dim} R)^2)$, when `Load Type`=6. The blade element model is not effected by specified torque coefficient. The propeller convention is $K_Q =$ Torque / $(\rho_{ref} n^2 D^5)$, where n is revolutions per unit time, and D is diameter, i.e, `TorqueCoff`$= \frac{8}{\pi^3} K_Q$.

B.6.5 Blade Parameters

`psi0` *(required for coupled simulation)*

This is the initial azimuthal position of blade one, in degrees; the azimuth position is defined as zero when the blade is oriented along the x-axis with the tip at the most positive x location.

`PitchHinge` *(required for coupled simulation)*

This is the radial position of the blade pitch hinge normalized by tip radius.

`DirRot` *(required for coupled simulation)*

This is the direction of rotor rotation. Zero is counter-clockwise rotation and one is clockwise rotation. This option only applies to coupled simulation, not actuator models.

`# Blades` *(required for coupled simulation)*

This is the number of rotor blades. It is only used for `Load Type`=3 and overset rotor simulations.

`TipRadius` *(required for coupled simulation)*

This is the radius of the blade, in grid units.

`RootRadius` *(required for coupled simulation)*

This is the radius of the blade root, in grid units. It accounts for the cutout region immediately surrounding the hub.

`BladeChord` *(required for coupled simulation)*

This is the chord length of the blade, in grid units. It can only handle rectangular blade planforms and is only valid for `Load Type`=3.

`FlapHinge` *(required for coupled simulation)*

This is the radial position of the blade flap hinge normalized by tip radius.

`LagHinge` *(required for coupled simulation)*

This is the radial position of the blade lag hinge normalized by tip radius.

B.6.6 Blade Element Parameters for `Load Type`=3

These inputs are used to set the blade element lift and drag curves according to:

$$C_L = \texttt{LiftSlope}(\alpha - \alpha_{L=0}) \tag{B7}$$

and

$$C_D = \texttt{cd0} + \texttt{cd1}\,\alpha + \texttt{cd2}\,\alpha^2 \tag{B8}$$

`LiftSlope`

This is the lift curve slope per radian.

`alpha, L=0`

This is the zero lift angle of attack, in degrees.

`cd0`, `cd1`, and `cd2`

These are the quadratic drag polar coefficients; where `cd1` is per radian and `cd2` is per radian squared.

CL_max and CL_min

These limiters to control the lift coefficient beyond the linear region.

CD_max and CD_min

These limiters to control the drag coefficient.

Swirl

0 neglects the sources terms that create rotor swirl.

1 the swirl inducing source terms.

B.6.7 Pitch Control Parameters for `Load Type`=3

These inputs are used to specify the pitch/flap controls according to:

$$\theta = \texttt{Theta0} + \texttt{ThetaTwist}\,(r/R) + \texttt{Theta1c}\,\cos(\psi) + \texttt{Theta1s}\,\sin(\psi) \quad \text{(B9)}$$

Theta0

This is the collective pitch defined at r/R=0, in degrees.

ThetaTwist

This is the total amount of linear blade twist from the origin to the blade tip, in degrees.

Theta1s

This is the longitudinal cyclic pitch input, in degrees.

Theta1c

This is the lateral cyclic pitch input, in degrees.

Pitch-Flap

Pitch-Flap coupling parameter [not implemented].

B.6.8 Prescribed Flap Parameters

These inputs are used to specify the flap harmonics according to:

$$\begin{aligned}\beta = \texttt{Beta0} + \texttt{Beta1s}\,\sin(\psi) + \texttt{Beta1c}\,\cos(\psi)\\ +\texttt{Beta2s}\,\sin(2\psi) + \texttt{Beta2c}\,\cos(2\psi)\\ +\texttt{Beta3s}\,\sin(3\psi) + \texttt{Beta3c}\,\cos(3\psi)\end{aligned} \quad \text{(B10)}$$

FlapHar

This is the number of flap harmonics to include. The valid input range is zero to three.

`Beta0`

This is the coning angle, in degrees.

`Beta1s` and `Beta1c`

This is the first flap harmonics, in degrees.

`Beta2s` and `Beta2c`

This is the second flap harmonics, in degrees.

`Beta3s` and `Beta3c`

This is the third flap harmonics, in degrees.

B.6.9 Prescribed Lag Parameters

These inputs are used to specify the lag harmonics according to:

$$\begin{aligned}\delta = \texttt{Delta0} + \texttt{Delta1s}\,\sin(\psi) + \texttt{Delta1c}\,\cos(\psi)\\ +\texttt{Delta2s}\,\sin(2\psi) + \texttt{Delta2c}\,\cos(2\psi)\\ +\texttt{Delta3s}\,\sin(3\psi) + \texttt{Delta3c}\,\cos(3\psi)\end{aligned} \tag{B11}$$

`# LagHar`

This is the number of lag harmonics to include. The valid input range is zero to three.

`Delta0`

This is the coning angle, in degrees.

`Delta1s` and `Delta1c`

This is the first lag harmonics, in degrees.

`Delta2s` and `Delta2c`

This is the second lag harmonics, in degrees.

`Delta3s` and `Delta3c`

This is the third lag harmonics, in degrees.

B.7 tdata

This file defines the gas model when `eqn_type = 'generic'`. A keyword is required on the first line of `tdata`. Many of these models require additional information as detailed in each keyword section.

Some keywords require a list the species. For these keywords, additional groups of species can be specified for boundary conditions after a blank line. If new species are introduced in subsequent instances their mass fractions are automatically initialized to zero at any previous inflow boundary. All the species entries in this file are available as reactants throughout the entire flow field.

B.7.1 perfect_gas Keyword

A perfect gas can be modeled with the `perfect_gas` keyword. The parameters can be explicitly defined in `tdata` by the namelist `&species_properties`. The namelist in `tdata` has different variables than the `&species_properties` in `species_thermo_data`. Here is an example of the namelist with defaults that are all given in SI units,

```
perfect_gas
&species_properties
 gamma   =   1.4
 mol_wt  =  28.8
 suther1 =   0.1458205E-05
 suther2 = 110.333333
 prand   =   0.72
/
```

Where `gamma` is the gas specific heat ratio, `mol_wt` is the gas molecular weight, `prand` is the gas Prandtl number, and `suther1` and `suther2` are the first and second Sutherland's viscosity coefficients, s_1 and s_2, in

$$\mu = s_1 \frac{T^{3/2}}{T + s_2} \tag{B12}$$

These defaults are used if the `&species_properties` namelist or any of its variables are omitted.

B.7.2 equilibrium_air_t Keyword

The `equilibrium_air_t` keyword engages the Tannehill curve fits for thermodynamic and transport properties of equilibrium air. [81] This keyword does not require additional lines.

```
equilibrium_air_t
```

B.7.3 `equilibrium_air_r` Keyword

The `equilibrium_air_r` keyword engages the Tannehill curve fits for transport properties and a table look-up for equilibrium gases [82], This keyword does not require additional lines.

```
equilibrium_air_r
```

B.7.4 `one` Keyword

This one-temperature (1-T) model assumes that all the species are thermally in equilibrium state; the translational temperature T and vibrational temperature T_v are equal. This is a mixture of thermally perfect gases and multi-species transport. In this example, only molecular oxygen and nitrogen are present on the inflow boundary, but atomic nitrogen and oxygen and nitric oxide may be produced elsewhere in the flow field due to chemical reactions. The inflow boundary mass fraction of molecular oxygen and nitrogen is given next to their symbols. Mass fractions should sum to one.

```
one
N2  .767
N
O2  .233
O
NO
```

B.7.5 `two` Keyword

This two-temperature (2-T) model assumes that energy distribution in the translational and rotational modes of heavy particles (not electrons) are equilibrated at translational temperature T and all other energy modes (vibrational, electronic, electron translational) are equilibrated at vibrational temperature T_v. In this example, the gas is assumed to be a mixture of 11 thermally perfect gases. The inflow boundary mass fraction of molecular oxygen and nitrogen is given next to their symbols. Mass fractions should sum to one. Other products are the results of chemical reactions flow field.

```
two
N2  .767
N
O2  .233
O
NO
O2+
O+
NO+
e-
```

B.7.6 FEM Keyword

This Free-Energy Minimization (FEM) model causes the species continuity equations to be replaced with elemental continuity equations and equilibrium relations for remaining species. In this example, the gas is assumed to be a mixture of 11 thermally perfect gases. The inflow boundary mass fraction of molecular oxygen and nitrogen is given next to their symbols. Mass fractions should sum to one. Other products are the results of chemical reactions flow field.

```
FEM
N2  .767
N
O2  .233
O
NO
O2+
O+
NO+
e-
```

B.8 species_thermo_data

The species_thermo_data file is the master file for species thermodynamic data. The majority of simulations do not require changes to this file. Investigating other sources of thermodynamic data is the only reason to edit this file. If the file is not found in the local run directory, it is assumed to be located in the [install-prefix]/share/physics_modules directory. See section A.3 for [install-prefix].

Each species record consists of the species name, a &species_properties namelist, the number of thermodynamic property curve fit ranges, and the curve fit coefficients for each range. [83] No blank line is allowed in this file. This &species_properties namelist has different variables than the &species_properties in tdata. The elements of the &species_properties namelist are:

mol_wt

This sets the molecular weight of the particle. It is always required.

elec_impct_ion = -1._dp

This sets the energy for neutrals ion=.false. that is required to liberate an electron when the neutral impact a free electron, in units of electron volts (eV).

`siga(:) = -1._dp`

This is an array of three real numbers, which correspond to the curve fit coefficients for electron-neutron energy exchange. The cross section is defined as

$$\sigma_{en} = a + bT + cT^2 \tag{B13}$$

where σ_{en} is the electron-neutron energy exchange collision cross section in m^2. The variables a, b, and c are the curve fit coefficients and T is the gas temperature. [84,85] For example, `siga=7.5e-20, 0, 0`.

`disoc_ener = 0._dp`

This is the dissociation energy of molecule in electron volts (eV).

`alantel = 0._dp`

This is the Landau-Teller constant to compute vibrational relaxation time for molecule. [86,87]. It is required when `molecule=.true.`.

`cprt0 = 0._dp`

This non-dimensional real number defines translational-rotational heat capacity. It is normalized by the gas constant and is equal to

$$cprt() = \frac{f+2}{2} \tag{B14}$$

where f is the number of degrees of freedom in translation and rotation. The defaults for atoms and diatomic molecules are 2.5 and 3.5, respectively.

A portion of the `species_thermo_data` that provides thermodynamic properties of carbon is shown below.

```
C
&species_properties
elec_impct_ion = 11.264
siga = 7.5e-20, 5.5e-24, -1.e-28
mol_wt = 12.01070
/
3
 0.64950315E+03 -0.96490109E+00  0.25046755E+01 -0.12814480E-04
 0.19801337E-07 -0.16061440E-10  0.53144834E-14  0.00000000E+00
 0.85457631E+05  0.47479243E+01   200.000  1000.000
-0.12891365E+06  0.17195286E+03  0.26460444E+01 -0.33530690E-03
 0.17420927E-06 -0.29028178E-10  0.16421824E-14  0.00000000E+00
 0.84105978E+05  0.41300474E+01  1000.000  6000.000
 0.44325280E+09 -0.28860184E+06  0.77371083E+02 -0.97152819E-02
 0.66495953E-06 -0.22300788E-10  0.28993887E-15  0.00000000E+00
 0.23552734E+07 -0.64051232E+03  6000.000 20000.000
```

The species name is defined in line 1. Between lines 2 and 9 species properties are defined. Line 10 shows that there are three thermodynamic property curve fits for temperature ranges of 200 K $< T <$ 1,000 K, 1,000 K $< T <$ 6,000 K, and 6,000 K $< T <$ 20,000 K. Each data range consists of 12 real numbers. Four real numbers must be given on each line. The first 10 real numbers are the thermodynamic curve fit coefficients, and the last two real numbers identify the temperature range for the given curve fit coefficients. These coefficients are used to calculate the following thermodynamic properties

$$c_p(T)/R = a_1T^{-2} + a_2T^{-1} + a_3 + a_4T + a_5T^2 + a_6T^3 + a_7T^4 \tag{B15}$$

$$h(T)/RT = -a_1T^{-2} + a_2T^{-1} ln\ T + a_3 + a_4\frac{T}{2} + a_5\frac{T^2}{3} + a_6\frac{T^3}{4} + a_7\frac{T^4}{5} + \frac{a_9}{T} \tag{B16}$$

$$s(T)/R = -a_1\frac{T^{-2}}{2} - a_2T^{-1} + a_3 ln\ T + a_4T + a_5\frac{T^2}{2} + a_6\frac{T^3}{3} + a_7\frac{T^4}{4} + a_{10} \tag{B17}$$

where T is the gas temperature, R is the universal gas constant, c_p, h, and s are the species specific heat, enthalpy and entropy, respectively, and a_i are the provided curve fit coefficients in `species_thermo_data`.

The following corrections will be applied if the gas temperature is out of the given range for the given curve fit coefficients:

$$c_p(T) = c_p(T^*) \tag{B18}$$

$$h(T) = h(T^*) + (T - T^*)c_p(T^*) \tag{B19}$$

$$s(T) = s(T^*) + ln\ \frac{T}{T^*}c_p(T^*) \tag{B20}$$

where

$$T^* = \begin{cases} T_{lower} & \text{for } T < T_{lower} \\ T_{upper} & \text{for } T > T_{upper} \end{cases} \tag{B21}$$

B.9 `kinetic_data`

The `kinetic_data` file defines possible chemical reactions and is optional. If the file is not found in the local run directory, it is assumed to be located in the `[install-prefix]/share/physics_modules` directory. See section A.3 for `[install-prefix]`. Reactants and products can be any species defined in the `species_thermo_data` described in section B.8. A sample entry looks like

```
O2 + M    <=>   2O + M                                    1
2.000e+21  -1.50  5.936e+04                               2
teff1 = 2                                                 3
exp1 = 0.7                                                4
t_eff_min = 1000.                                         5
t_eff_max = 50000.                                        6
```

```
C = 5.0                                                    7
O = 5.0                                                    8
N = 5.0                                                    9
H = 5.0                                                    10
Si = 5.0                                                   11
e- = 0.                                                    12
```

The first line specifies the reaction while line 2 provides three coefficients of an Arrhenius-like equation,

$$K_f = c_f T_{eff}^{\eta} e^{-\epsilon_0/kT_{eff}} \tag{B22}$$

where c_f is the pre-exponential factor, η is the power of temperature dependence on the pre-exponential factor, ϵ_0 is the Arrhenius activation energy, and k is the Boltzmann constant. The arrowheads in line 1 signify the allowed directionality of the reaction. The symbol `=>` denotes forward reaction only while `<=>` denotes forward and backward rates are computed. The coefficients in line 2 correspond to c_f, η, and ϵ_0/k, respectively. For reactions with a generic collision partner, `M`, such as this one, these coefficients correspond to Argon; and other collision partners and their efficiencies (multipliers of c_f) are specified on lines following line 5 and 6, which give the valid temperature range for the reaction. The effective temperature, T_{eff}, is defined according to a given integer number in line 3.

`teff1 = 1,teff2 = 1`

This defines the formula to compute the effective temperature T_{eff} for the forward rate and backward rate, respectively. It is engaged for the case of thermal nonequilibrium. Options for `teff` are:

1: $T_{eff} = T_{tr}$
2: $T_{eff} = T_{tr}^{exp1} T_v^{1-exp1}$
3: $T_{eff} = T_v$

where T_{tr} and T_v are translational and vibrational temperatures, respectively.

`exp1 = 0.7`

This is the exponent used to define the effective temperature when `teff1= 2` (forward rate) or `teff2 = 2` (backward rate).

`rf_max = 1.e+20`

This is the upper limit on forward reaction rate in cgs units when `augment_kinetics_limiting = .true`. For unlimited rates as function of temperature, see the output file `kinetic_diagnostics_output`.

rf_min = 1.e-30

This is the lower limit on forward reaction rate in cgs units when augment_kinetics_limiting= .true. For unlimited rates as function of temperature, see the output file kinetic_diagnostics_output.

rb_max = 1.e+30

This is the upper limit on backward reaction rate in cgs units when augment_kinetics_limiting = .true. For unlimited rates as function of temperature, see the output file kinetic_diagnostics_output.

rb_min = 1.e-30

This is the lower limit on backward reaction rate in cgs units when augment_kinetics_limiting = .true. For unlimited rates as function of temperature, see the output file kinetic_diagnostics_output.

t_eff_min = 1000.

This is the minimum temperature for T_{eff}. This may circumvent stiff source terms when computing reaction rates.

t_eff_max = 50000.

The maximum temperature for T_{eff}. This may circumvent stiff source terms when computing reaction rates.

B.10 species_transp_data

The species_transp_data file contains log-linear curve fit coefficients for species collision cross sections that are defined based on temperature range of 2,000–4,000 K. [85] This temperature range spans boundary-layer temperatures for typical hypersonic entry. The curve fit for the given coefficients is poor at temperatures below 1,000 K. Higher order curve fit data is available in species_transp_data_0. The file should not be changed by the user unless there is a need to investigate other sources of collision cross-section data. If the file is not found in the local run directory, it is assumed to be located in the [install-prefix]/share/physics_modules directory. See section A.3 for [install-prefix]. An example of the entries in the file is

```
 Ar Ar
-14.6017 -14.6502 -14.5501 -14.6028 ! trr132+kestin et al
Ar+ Ar+
-11.48 -12.08 -11.50 -12.10
Ar N2
-14.5995 -14.6475 -14.5480 -14.5981 ! kestin et al
Ar CO
-14.5975 -14.6455 -14.5459 -14.5964 ! kestin et al
```

B.11 species_transp_data_0

The file species_transp_data_0 provides collision cross section coefficients [88,89] for a higher order curve fit data than those that are in the species_transp_data. The data in species_transp_data_0 supersedes the data in species_transp_data The file should not be changed by the user unless there is a need to investigate other sources of collision cross-section data. If the file is not found in the local run directory, it is assumed to be located in the [install-prefix] /share/physics_modules directory. See section A.3 for [install-prefix]. An example of the entries in the file is

```
O2 N      1 1 1      (c)
         -1.1453028E-03  1.2654140E-02 -2.2435218E-01  7.7201588E+01
         -1.0608832E-03  1.1782595E-02 -2.1246301E-01  8.4561598E+01
          1.4943783E-04 -2.0389247E-03  1.8536165E-02  1.0476552E+00

NO N      1 1 1      (c)
         -1.5770918E-03  1.9578381E-02 -2.7873624E-01  9.9547944E+01
         -1.4719259E-03  1.8446968E-02 -2.6460411E-01  1.0911124E+02
          2.1014557E-04 -3.0420763E-03  2.5736958E-02  1.0359598E+00

NO O      1 1 1      (c)
         -1.0885815E-03  1.1883688E-02 -2.1844909E-01  7.5512560E+01
         -1.0066279E-03  1.1029264E-02 -2.0671266E-01  8.2644384E+01
          1.4145458E-04 -1.9249271E-03  1.7785767E-02  1.0482162E+00

END END   1 1 0
             0. 0. 0. 0.
             0. 0. 0. 0.
```

B.12 hara_namelist_data

The hara_namelist_data file controls the radiation models used by the HARA radiation module. [90,91] It is optional for coupled radiation simulations. If it is not present, then the code automatically chooses the radiative mechanisms associated with species present in the flowfield that have number densities greater than 1000 particles/cm^2) Other options are set to the defaults. For users not experienced in shock-layer radiation, the recommended default options should be used. this hara_namelist_data A default hara_namelist_data is available in the PHYSICS_MODULES directory of the FUN3D distribution.

specifying radiation mechanisms for atomic species: The treatment of radiation resulting from atomic lines, atomic bound-free, and free-free photoionization (referred to here as atomic continuum), and negative ion continuum is available for atomic carbon, hydrogen, oxygen, and nitrogen. These

mechanisms are specified through the following binary flags (on=1/off=0). If any of these flags are not present in `hara_namelist_data`, then that flag is set to true only if the number density of the associated atomic species is greater than 1000 particles/cm^2 somewhere in the flowfield.

`treat_[?]_lines`

A binary flag to enable the treatment of atomic lines for species `[?]`, where `[?]` can be c, h, n, and o, for atomic carbon, hydrogen, nitrogen and oxygen, respectively.

`treat_[?]_cont`

A binary flag to enable the treatment of atomic bound-free and free-free continuum for species `[?]`, where `[?]` can be c, h, n, and o, for atomic carbon, hydrogen, nitrogen and oxygen, respectively.

`treat_[?]_other`

A binary flag to enable the treatment of the negative-ion continuum for species `[?]`, where `[?]` can be c, h, n, and o, for atomic carbon, hydrogen, nitrogen and oxygen, respectively.

specifying radiation mechanisms for molecular species: The treatment of radiation resulting from numerous molecular band systems is available through the following flags (0 = off, 1 = SRB, 2 = LBL). The smeared rotational band (SRB) approach applies a simplified and efficient treatment of each molecular band system, which is accurate for optically thin conditions. The line-by-line (LBL) approach is a detailed but highly inefficient treatment of each molecular band system. The LBL option is not recommended for coupled radiation-flowfield computations, except for possibly the CO 4+ system, which may be optically thick for Mars entry conditions. If any of these flags are not present in `hara_namelist_data`, then that flag is set to the SRB option only if the number density of the associated molecular specie is greater than 1000 particles/cm^2 somewhere in the flowfield. Additional band systems are listed in the following paragraph. These additional band systems are generally considered negligible relative to those listed in this section. Therefore, for computational efficiency, they are not engaged by default. Definitions of each band system and the modeling data applied are discussed in Refs. [90, 92].

`treat_band_c2_swan`

A flag activating the C_2 Swan band system.

`treat_band_c2h`

A flag activating the C_2H band system.

treat_band_c3

A flag activating the C_3 and vacuum ultra-violet (VUV) band systems.

treat_band_cn_red

A flag activating the CN red band system.

treat_band_cn_violet

A flag activating the CN violet band system.

treat_band_co4p

A flag activating the CO 4+ band system.

treat_band_co_bx

A flag activating the CO B-X band system.

treat_band_co_cx

A flag activating the CO C-X band system.

treat_band_co_ex

A flag activating the CO E-X band system.

treat_band_co_ir

A flag activating the CO X-X band system.

treat_band_h2_lyman

A flag activating the H_2 Lyman band system.

treat_band_h2_werner

A flag activating the H_2 Werner band system.

treat_band_n2fp

A flag activating the N_2 1+ band system.

treat_band_n2sp

A flag activating the N_2 2+ band system.

treat_band_n2pfn

A flag activating the N_2^+ first-negative band system.

treat_band_n2_bh1

A flag activating the N_2 Birge-Hopfield I band system.

treat_band_n2_bh2

A flag activating the N_2 Birge-Hopfield II band system.

treat_band_no_beta

A flag activating the NO beta band system.

treat_band_no_delta

A flag activating the NO delta band system.

treat_band_no_epsilon

A flag activating the NO epsilon band system.

additional molecular band systems: This paragraph lists molecular band systems available in addition to those listed in the paragraph above. The band systems listed here are generally weak emitters and absorbers, and are therefore not engaged as a default. Therefore, for these band systems to be engaged, the following flags (0 = off, 1 = SRB, 2 = LBL) must be present in the hara_namelist_data file. The LBL treatment of these bands is not recommended.

treat_band_c2_br

A flag activating the C_2 Ballik-Ramsay band system.

treat_band_c2_da

A flag activating the C_2 Deslandres-d'Azambuja band system.

treat_band_c2_fh

A flag activating the C_2 Fox-Herzberg band system.

treat_band_c2_mulliken

A flag activating the C_2 Mulliken band system.

treat_band_c2_philip

A flag activating the C_2 Philips band system.

treat_band_co3p

A flag activating the CO 3+ band system.

treat_band_co_angstrom

A flag activating the CO angstrom band system.

treat_band_co_asundi

A flag activating the CO Asundi band system.

treat_band_co_triplet

A flag activating the CO triplet band system.

treat_band_co2

A flag activating the CO_2 band system. A value of two activates an approximate nonequilibrium model for UV emission, while a value of one assumes Boltzmann emission. The LBL treatment of this band is not available.

treat_band_n2_cy

A flag activating the N_2 Carrol-Yoshino band system.

treat_band_n2_wj

A flag activating the N_2 Worley-Jenkins band system.

treat_band_n2_worley

A flag activating the N_2 Worley band system.

treat_band_no_gamma

A flag activating the NO gamma band system.

treat_band_no_betap

A flag activating the NO beta-prime band system.

treat_band_no_gammap

A flag activating the NO gamma-prime band system.

treat_band_o2_sr

A flag activating the O_2 Schumann-Runge band system.

treat_[?]_photo_dis

A binary flag activating the molecular photo-dissociation mechanism [93] for [?] specie, where [?] can be O2 or N2. This mechanism is not technically a molecular band system.

treat_[?]_photo_ion

A binary flag activating the molecular photo-ionization mechanism [93] for [?] specie, where [?] can be O2 or N2. This mechanism is not technically a molecular band system.

treat_no_photo

A binary flag activating the molecular photo-ionization mechanism [93] for NO.

atomic line models: There are various models available for atomic line radiation, one of which must be chosen for each specie that engages atomic line radiation (as specified using `treat_[?]_lines`). This choice of atomic line model is made using the following flags. The listed defaults are applied if the individual flag is not present in `hara_namelist_data`, or if `hara_namelist_data` is not present in the working directory. All model types in this category must be surrounded by a quotation marks.

`c_atomic_line_model`, `h_atomic_line_model`

A character identifier for selecting the atomic line model for atomic carbon or hydrogen. Presently, the only available option is the model compiled in Ref. [92], which is referred to here as the Complete Line Model (CLM). Default : `'clm'`

`n_atomic_line_model`, `o_atomic_line_model`

A character identifier for selecting the atomic line model for atomic nitrogen or oxygen. The available models are compiled and compared in Ref. [90], which is referred to here as the Complete Line Model (CLM). Default : `'clm'` Available models are:

`'all multiplets'`

This model treats all lines as grouped multiplets. This significantly reduces the number of lines treated as well as the computational expense. However, this grouped multiplet approximation will lead to errors for non-optically-thin conditions.

`'clm'`

This model, which stands for Complete Line Model, applies the individual treatment of strong atomic lines while applying multiplet averages for weak lines. This is the recommended model.

electronic state population models: These flags specify the model applied for predicting the electronic state populations of atoms and molecules. The listed defaults are applied if the individual flag is not present in `hara_namelist_data`, or if `hara_namelist_data` is not present in the working directory. All model types in this category must be surrounded by a quotation marks, e.g. ' '.

atomic electronic states

The electronic state populations for atoms are required for computing atomic line and photoionization emission and absorption. The compilation and comparison of the available models are presented in Ref. [91].

`c_electronic_state`, `h_electronic_state`

A character identifier for selecting the electronic state model for atomic carbon and hydrogen. Available models are (default : 'boltzmann'):

`'boltzmann'`

Applies Boltzmann population of electronic states.

`'Gally_1st_order_LTNE'`

Applies the Gally first-order local thermodynamic nonequilibrium method [94], which approximately accounts for the non-Boltzmann population of atomic states.

`n_electronic_state`, `o_electronic_state`

A character identifier for selecting the electronic state model for atomic nitrogen and oxygen. Available models are (default : 'CR'):

`'boltzmann'`

Same as for `c_electronic_state`

`'Gally_1st_order_LTNE'`

Same as for `c_electronic_state`

`'CR'`

Applies the detailed collisional radiative (CR) model developed in Ref. [91].

`'AARC'`

Applies the approximate atomic collisional radiative (AARC) model developed in Ref. [91]. This model is essentially a curve-fit based approximation of the CR model, which allows for improved computational efficiency with a slight loss in accuracy.

molecular electronic states

The electronic state populations for molecules are required for computing molecular band emission and absorption. The compilation and comparison of the available models are presented in Refs. [91, 95].

`molecular_electronic_state`

A character identifier for selecting molecular electronic state for all molecular band systems. Available models are (default : 'CR'):

`'boltzmann'`

Applies Boltzmann population of electronic states.

`'CR'`

Applies a detailed collisional radiative model considering both heavy-particle and electron impact transitions. Some molecular states are still assumed Boltzmann with this model because no data is presently available for the CR model.

other flags:

`use_triangles`

A logical flag specifying whether optically-thin atomic lines are modeled as triangles to reduce computational time. This option has shown to result in a negligible loss of accuracy while greatly reducing the computational time, [90] and is therefore recommended. Default : .true. Note: This flag is automatically set to `.true.` when `n_` or `o_atomic_line_model= 'clm'` — see **atomic line models** earlier in this section.

`use_edge_shift`

A logical flag to engage the photoionization edge shift [90] for atomic bound-free radiation. (on=1/off=0). Default : .true.

Appendix C

Troubleshooting

The goal of the FUN3D developers is to produce as robust a solver as possible. However, there are times when the code fails to produce a converged solution. For example, taking the square root of a negative quantity (due to a negative density or pressure) results in a NaN. We hope that these suggestions are helpful. If none of the suggestions listed here remedy your problem, please contact `Fun3D-Support@lists.nasa.gov`.

C.1 What if I cannot run the solver in parallel?

While the predominant way of executing FUN3D is on parallel architectures, the use of MPI for concurrent processing introduces additional complexity. It is critical that consistency is maintained between the build and execution environments for not only FUN3D but also its dependent third party libraries. The consistency holds true for maintaining the same MPI implementation and Fortran compiler across the builds and execution. When checking for consistency one might use the following in the build environment,

```
$ which mpif90     # to show the MPI installation used
$ mpif90 -show     # to show the underlying Fortran compiler used with MPI
```

In the execution environment of all hosts,

```
$ which mpirun     # to show the MPI installation used
$ which $FC        # to show the Fortran compiler and runtime
```

The MPI installations and Fortran compilers must agree for successful concurrent execution.

C.2 What if the solver has trouble starting or reports NaNs?

Check that the freestream, reference, and boundary conditions are specified correctly. Visualize the solution, especially near the location of the maximum residual. If the problem is widespread, run the simulation again and visualize the solution a few iterations before the problem happens. Look for extremely large Mach numbers, low pressures, low densities, or reversed flow at boundaries.

If the solver gave you `nan_locations_#.dat` files (where `#` corresponds to the processor number), visualize their locations by loading them (and your

boundaries) into your plotting software, e.g., for Tecplot™, load your boundary data, and then "add," "by position," a scatter plot layer of spheres. Their locations may point to regions of poor grid quality (typically too coarse to resolve high-gradient physics) or areas where the linearized Riemann fluxes are not valid, [96] e.g., typically expansions severe enough to produce a vacuum condition during flux reconstruction. You might try one or more of the following: generate a finer grid in the affected area(s), initialize stagnant flow in the area(s) (typically wake regions),[C1] add a flux-reconstruction limiter, and/or use a different flux function.[C2]

Examining the residual history may help to isolate the problem to the mean flow or turbulence model. Lowering the CFL numbers of the mean-flow and turbulence equations can aid linear and nonlinear convergence, see section B.4.14. If the linear system is diverging (the linear system can be examined with the `--monitor_linear` command line option), utilize a more dissipative flux linearization `flux_construction_lhs` or the Krylov projection method `linear_projection=.true.`, see section B.4.17.

Try flow field initialization in the problematic region of the domain (e.g., engine plenum), see section B.4.24. Start with some `first_order_iterations` (section B.4.9) or try continuation from less challenging freestream condition (e.g., lower angle of attack, subsonic Mach number). The time accurate flow solver may be able to survive initial transients better than the steady solver.

C.3 What if the forces and moments aren't steady or residuals don't converge to steady-state?

Try lowering the CFL numbers of the mean flow and turbulence model, see section B.4.14. Examining the residual history may help to isolate the problem to the mean flow or turbulence model. The problem may be unsteady; try restarting the solution with a time-accurate simulation.

C.4 What if the solver dies unexpectedly?

You may need to set your shell limits to unlimited,

```
$ ulimit unlimited # for bash
$ unlimit          # for c shell
```

An example of dying unexpectedly is a `SIGSEGV` Signal 11 fault up to or during the first time step, or during post processing.

If your operating system reports a `SIGKILL` Signal 9 or `SIGSEGV` Signal 11 and you have already tried removing shell restrictions, you have likely hit

[C1] See section B.4.24 for flowfield initialization.
[C2] See section B.4.9 for flux and flux-limiter options.

the memory limit of your machine. Try reducing the number of mesh points, running on more nodes, or installing more memory on your machine.

C.5 What if the compiler complains, "This module file was not generated by any release of this compiler"?

This indicates that you have compiled files from multiple versions of a compiler or compilers from different vendors. Use,

```
$ make -j clean
```

to remove inconsistent files before attempting to re-compile.

C.6 What if the solver dies with an error like "Probable incomplete read of namelist: &some_namelist"?

If this message persists after carefully checking for missing quotation marks, ampersands, array indices, etc., try checking for special, non-ASCII characters, e.g., `cat -v fun3d.nml`.

C.7 What if a segmentation fault occurs after "Calling ParMETIS"?

Make sure that the the width (32 or 64 bits) of integers in FUN3D and ParMETIS are consistent. More recent implementations of MPI (e.g., Open-MPI) internally manage the handles (i.e., communicators) differently from previous versions of MPI. However, ParMETIS 3.* uses an older paradigm, which has been updated in ParMETIS 4.*. Upgrade to ParMETIS 4.*.

C.8 What if the solver dies with an error like "input statement requires too much data" after echoing the number of tetrahedra and nodes for a VGRID mesh?

The endianness (section 4.1) of the grid files (section 4) may be different than FUN3D expects. Single-segmented VGRID grids over 20 million nodes exceed the allowable record length. Use `postgrid` to save grid as a multi-segmented format (option `O5` in batch mode).

C.9 What if the solver reports that the Euler numbers differ?

The Euler number is a global indicator of consistent node, element, and face connectivity. There is some limited evidence that suggests there may be times when it reports a problem that may not be an issue for the solver, but the failure of the Euler number check indicates a problem with the grid in a majority of cases. Instructions to determine if the Euler number will impact your solution follow this description of the Euler number.

C.9.1 Euler Number Description

A valid grid is composed of four elemental volume types (tetrahedra, pyramids, prisms, and hexahedra) face-connected either to each other or one of two boundary face types (triangles or quadrilaterals). Each boundary edge connects to precisely two boundary faces. Two neighboring boundary faces share exactly one boundary edge. For each boundary face connecting to a boundary node, every other boundary face connecting to the same boundary node can be found by a path through a connected-edge/connected-face traverse starting from that boundary face.

The above restrictions are meant to exclude certain topologies such as two spherical boundaries coming together at a point or two rectangular boundaries connecting along an edge. These restrictions are not checked explicitly but will cause the Euler number check described below to fail.

The Euler Number computed from boundary data (EN_b) is

$$EN_b = N_b - E_b + F_b \tag{C1}$$

where

$$N_b \equiv \text{boundary nodes (counted)} \tag{C2}$$

$$E_b \equiv \text{boundary edges (inferred from} N_{tri} \text{ and } N_{quad}) \tag{C3}$$

$$F_b \equiv \text{boundary faces (inferred from } N_{tri} \text{ and } N_{quad}) \tag{C4}$$

The Euler number is a characteristic number for the topology of the boundary or boundaries. N_{tri} and N_{quad} are the number of triangular and boundary faces, respectively.

The Euler Number computed from volume data (EN_v) is

$$EN_v = 2(N - E + F - C) \tag{C5}$$

where

$$N \equiv \text{volume nodes (counted)} \tag{C6}$$

$$E \equiv \text{volume edges (counted)} \tag{C7}$$

$$F \equiv \text{volume faces (inferred from } C \text{ and } F_b) \tag{C8}$$

$$C \equiv \text{volume cells (counted)} \tag{C9}$$

The formula that is checked is

$$EN_v - EN_b = 0 \tag{C10}$$

Barth [97] derived this formula for tetrahedra and noted the formula does not hold in certain cases, such as two simplices that share only one common edge or two simplices that share only one common node. Barth notes that the above formulas are specific forms of the general Dehn-Sommerville formula, reported in Wikipedia to hold for simplicial polytopes and simple polytopes. The pyramid is not a simple polytope. It can be proved by induction [98] that the formula holds for every valid grid as defined above.

Try this checklist to diagnose the problem:

1. Check the EN_b with your expectations for this case:

   2 for a spherical topology, simple 3D wing with symmetry, ...

   0 for a torus, donut, ...

   -2 for a double torus, ...

   -4 for a triple torus, pretzel, ...

   4 for a sphere within a sphere, ...

   6 for two spheres within a sphere, ...

2. Ensure the number of boundary nodes N_b and faces F_b reported match expected values.

3. Ensure the number of nodes N and cells C reported match expected values.

4. The difference between EN_b and EN_v points to inconsistencies in edge counts, i.e., $\delta(E) = 2(EN_b - EN_v) \neq 0$. The inequality $EN_b > EN_v$ implies you have more edges than expected. When this occurs, the reported face counts will differ from an actual count. An error of this type would arise when there are adjacent faces that are inconsistent, such as a quadrilateral face shared between two elements that is cut into two triangular faces by different edges.

C.9.2 Determining the Impact of an Euler Number Mismatch

A freestream residual problem localization technique is described. However, the best practice is to not proceed without repairing the grid to ensure $EN_b = EN_v$. The `ignore_euler_number` namelist variable does just what the name

implies, and allows the solver to proceed. The `--test_freestream` option can be used as a secondary check on the mesh. On a valid mesh, the solver should preserve the freestream for an arbitrary number of iterations. You should run 20–50 iterations, which may require a lowering of the `stopping_tolerance` to 1e-20 so the solver does not automatically stop. All residuals should hover around machine zero, and not slowly increase (there will be iteration-to-iteration variation in the exact number, however).

If freestream is maintained by this test, you could proceed with your intended computation using only `ignore_euler_number`, but this is not recommended. If freestream is not maintained, this test confirms that there is a problem with the mesh and the location of the max residual may give a clue as to where in the mesh to start looking for the problem.

C.10 What if the initial residuals reported by the elasticity solver are unusually large when the input surface mesh is intended to recover the existing mesh?

This frequently occurs when parameterizing surface meshes for design optimization. Quite often the global point numbers being provided within the input surface mesh file are not consistent with the volume mesh that Fun3D is using internally. When Fun3D tries to associate coordinates from the input surface(s), it associates them with the wrong points in the global mesh. This results in what appear to be very large mesh movements (large initial residual in the elasticity system).

Plot the input surface mesh file(s) and verify that it appears as expected. If so, the global point numbers contained in the file are likely inconsistent with the global mesh file that Fun3D is using. The input surface mesh should be regenerated such that the global point numbers are consistent.

REPORT DOCUMENTATION PAGE

Form Approved
OMB No. 0704–0188

The public reporting burden for this collection of information is estimated to average 1 hour per response, including the time for reviewing instructions, searching existing data sources, gathering and maintaining the data needed, and completing and reviewing the collection of information. Send comments regarding this burden estimate or any other aspect of this collection of information, including suggestions for reducing this burden, to Department of Defense, Washington Headquarters Services, Directorate for Information Operations and Reports (0704-0188), 1215 Jefferson Davis Highway, Suite 1204, Arlington, VA 22202-4302. Respondents should be aware that notwithstanding any other provision of law, no person shall be subject to any penalty for failing to comply with a collection of information if it does not display a currently valid OMB control number.
PLEASE DO NOT RETURN YOUR FORM TO THE ABOVE ADDRESS.

1. REPORT DATE *(DD-MM-YYYY)*
01-10-2018

2. REPORT TYPE
Technical Memorandum

3. DATES COVERED *(From - To)*

4. TITLE AND SUBTITLE
FUN3D Manual: 13.4

5a. CONTRACT NUMBER

5b. GRANT NUMBER

5c. PROGRAM ELEMENT NUMBER

6. AUTHOR(S)
Biedron, Robert T.; Carlson, Jan-Reneé; Derlaga, Joseph M.; Gnoffo, Peter A.; Hammond, Dana P.; Jones, William T.; Kleb, Bil; Lee-Rausch,Elizabeth M.; Nielsen, Eric J.; Park, Michael A.; Rumsey, Christopher L.; Thomas, James L.; Thompson, Kyle B.; Wood, William A.

5d. PROJECT NUMBER

5e. TASK NUMBER

5f. WORK UNIT NUMBER
109492.02.07.01.01.01

7. PERFORMING ORGANIZATION NAME(S) AND ADDRESS(ES)
NASA Langley Research Center
Hampton, Virginia 23681-2199

8. PERFORMING ORGANIZATION REPORT NUMBER
L–20969

9. SPONSORING/MONITORING AGENCY NAME(S) AND ADDRESS(ES)
National Aeronautics and Space Administration
Washington, DC 20546-0001

10. SPONSOR/MONITOR'S ACRONYM(S)
NASA

11. SPONSOR/MONITOR'S REPORT NUMBER(S)
NASA/TM–2018–220096

12. DISTRIBUTION/AVAILABILITY STATEMENT
Unclassified-Unlimited
Subject Category 02
Availability: NASA STI Program (757) 864-9658

13. SUPPLEMENTARY NOTES
An electronic version can be found at http://ntrs.nasa.gov.

14. ABSTRACT
This manual describes the installation and execution of FUN3D version 13.4, including optional dependent packages. FUN3D is a suite of computational fluid dynamics simulation and design tools that uses mixed-element unstructured grids in a large number of formats, including structured multiblock and overset grid systems. A discretely-exact adjoint solver enables efficient gradient-based design and grid adaptation to reduce estimated discretization error. FUN3D is available with and without a reacting, real-gas capability. This generic gas option is available only for those persons that qualify for its beta release status.

15. SUBJECT TERMS
FUN3D; Aerodynamics; Computational fluid dynamics; Fluid Mechanics; Mathematics; Propulsion Systems

16. SECURITY CLASSIFICATION OF:			17. LIMITATION OF ABSTRACT	18. NUMBER OF PAGES	19a. NAME OF RESPONSIBLE PERSON
a. REPORT	b. ABSTRACT	c. THIS PAGE			STI Information Desk (help@sti.nasa.gov)
U	U	U	UU	376	**19b. TELEPHONE NUMBER** *(Include area code)* (757) 864-9658

Standard Form 298 (Rev. 8/98)
Prescribed by ANSI Std. Z39.18