FUN3D v12.4 Training

Session 4: Boundary Conditions

Jan Carlson

Boundary Conditions

(WE ARE THE PROBLEM!)

(WE’RE PART OF THE SOLUTION TOO!)

Learning Goals

What will be covered

- Boundary condition list
- Overview of BC's (with slightly abridged list)
  - Namelist parameters (optional/needed)
  - Default values in the namelist are green
  - Optional values in the namelist are blue
- Sample problems
  - Nozzle w/plenum
  - Inlet

Boundary conditions

- References
  - Inflow/Outflow Boundary Conditions with Application to FUN3D, Jan-Renee Carlson, NASA/TM-2011-217181, October 2011.
  - FUN3D V12.4 User manual (currently in review)

Problem setup

Required files

- project_name grid file
- fun3d.nml
- project_name.mapbc
  - Contains list of boundaries and the boundary condition to be associated with each one.
  - Keeping all the boundaries for a particular mesh separate (i.e. not lumping) can make for rather large and sometimes difficult to manage mapbc files.
  - Not lumping boundaries, though, allows the user to retain fine control over simulation parameters such as separate inflow conditions, separate outflow conditions and/or transition.

Boundary Conditions

The short list

- Wall (no-slip viscous)
  - Strong
  - Weak
- Inflow/Outflow
  - Farfield Roe, free stream conditions
  - Riemann: solves invariant problem conserving entropy
- Inflow
  - Total pressure, total temperature, flow angle
  - Supersonic fixed inflow
- Outflow
  - Back pressure allowing supersonic flow
  - Static pressure restricted to subsonic flow
  - Extrapolate

Boundary Conditions

Nomenclature

Name	Grid tool	FUN3D	Type
`tangency`	5	3000	slip wall
`viscous_solid`	4	4000	no-slip wall
`viscous_weak_wall`		4110	no-slip wall, weak emplementation
`viscous_wall_function`		4100	wall function
`symmetry_x,y,z`		6661, 6662, 6663	x-,y-,z-symmetry plane
`riemann`	3	5025	Riemann
`farfield_roe`		5050	farfield
`back_pressure`		5051	outflow (0<M<"big")
`subsonic_outflow_p0`		7012	outflow (0<M<1)
`subsonic_outflow_mach`		5052	outflow

Boundary Conditions

The short list

Name	Grid tool	FUN3D	Type
`subsonic_inflow_pt`		7011	inflow
`subsonic_inflow_vel`		7010	inflow
`extrapolate`		5026	outflow
`fixed_inflow`		7100	inflow (M > 1)
`fixed_outflow`		7105	outflow (M > 1)
`massflow_out`		7031	outflow
`massflow_in`		7036	inflow
`fixed_inflow_profile`		7101	inflow (M>1)

Typically used conditions

- Farfield (typ. inflow) – **`riemann`** (5025, 5000)
- Farfield (typ. outer lateral boundary) – **`farfield_roe`** (5050)
- Wing/Body/Tail/Flate plate – **`viscous_solid`** (4000)
- Subsonic plenum / wind tunnel inflow – **`subsonic_inflow_pt`** (7011)
- Channel / wind tunnel outflow (allows supersonic flow)– **`back_pressure`** (5051)
- Supersonic inflow (e.g. nozzle exit face) – **`fixed_inflow`** (7100)
- Supersonic outflow – **`extrapolate`** (5026)
- Subsonic inlet (restricted to subsonic flow)– **`subsonic_outflow_p0`** (7012)

Non-dimensionalization

- Far-field boundaries get conditions from fun3d.nml namelist parameter `mach_number` (5050, 5026, 5000).
- Non-dimensional freestream static pressure is always $1/\gamma$.
- The input static pressure ratio (SPR) (5051, 7012) is equal to the desired static pressure divided by the free stream static pressure.
- An input total pressure ratio is equal to the desired total pressure divided by the free stream static pressure. For air breathing propulsion, it is the nozzle pressure ratio (NPR) (7011).
- The input total temperature ratio is equal to the desired total pressure divided by the free stream static temperature. For air breathing propulsion, it is the nozzle temperature ratio (NTR) (7011).

Pressure ratio

To re-iterate a point on the previous slide, the normalization for pressure for the compressible-flow equations is:

$$p = p^* / (\rho^*_{ref} a^{*2}_{ref}) \quad \text{-->} \quad p_{ref} = p^*_{ref} / (\rho^*_{ref} a^{*2}_{ref}) = 1/\gamma$$

Input for the inflow boundary condition, **`total_pressure_ratio`**, can be thought of in two ways:

Total pressure ratio = p^*_{total} / p^*_{ref} or $p_{total} / p_{ref} = \gamma p_{total}$

Nozzle w/ subsonic plenum

Static test of an Acoustic Research Nozzle (ARN)

- Namelist settings
- Execution
- Output

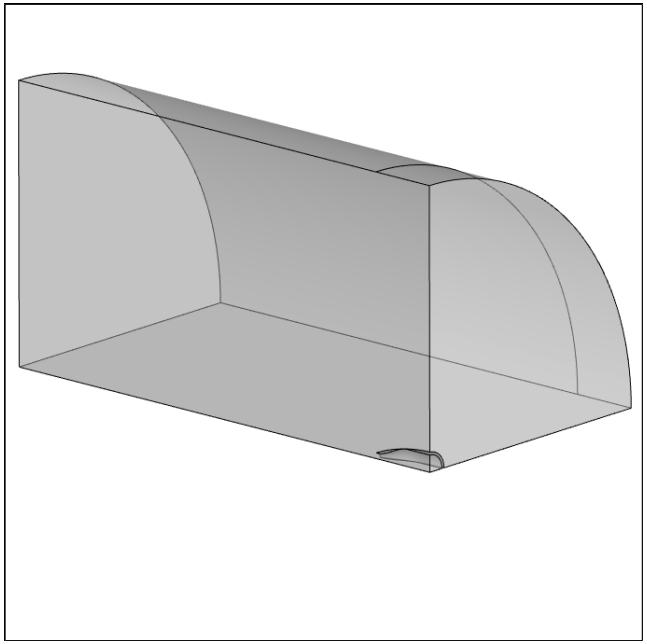

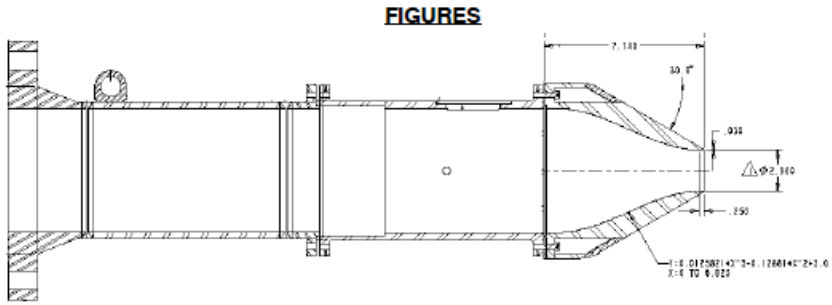

Figure 1 NASA Acoustic Reference Nozzle system, with ARN2 (51mm diameter) nozzle.

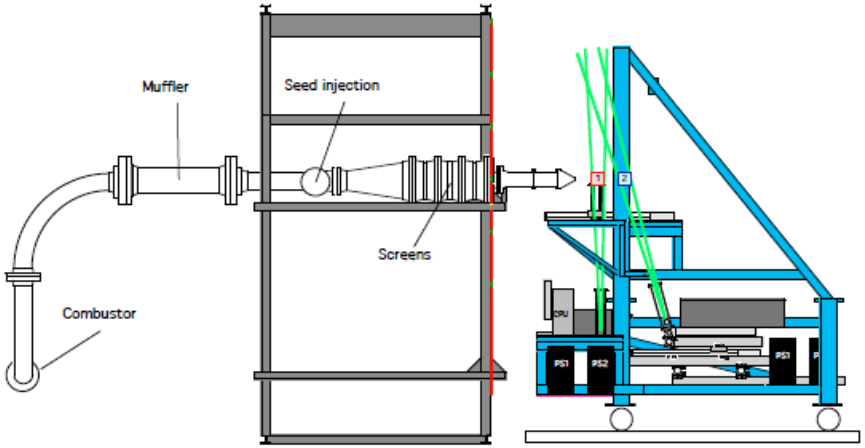

Figure 2 SHJAR with Dual PIV setup.

AIAA-2003-3130, Bridges

Nozzle w/ subsonic plenum

Boundary conditions

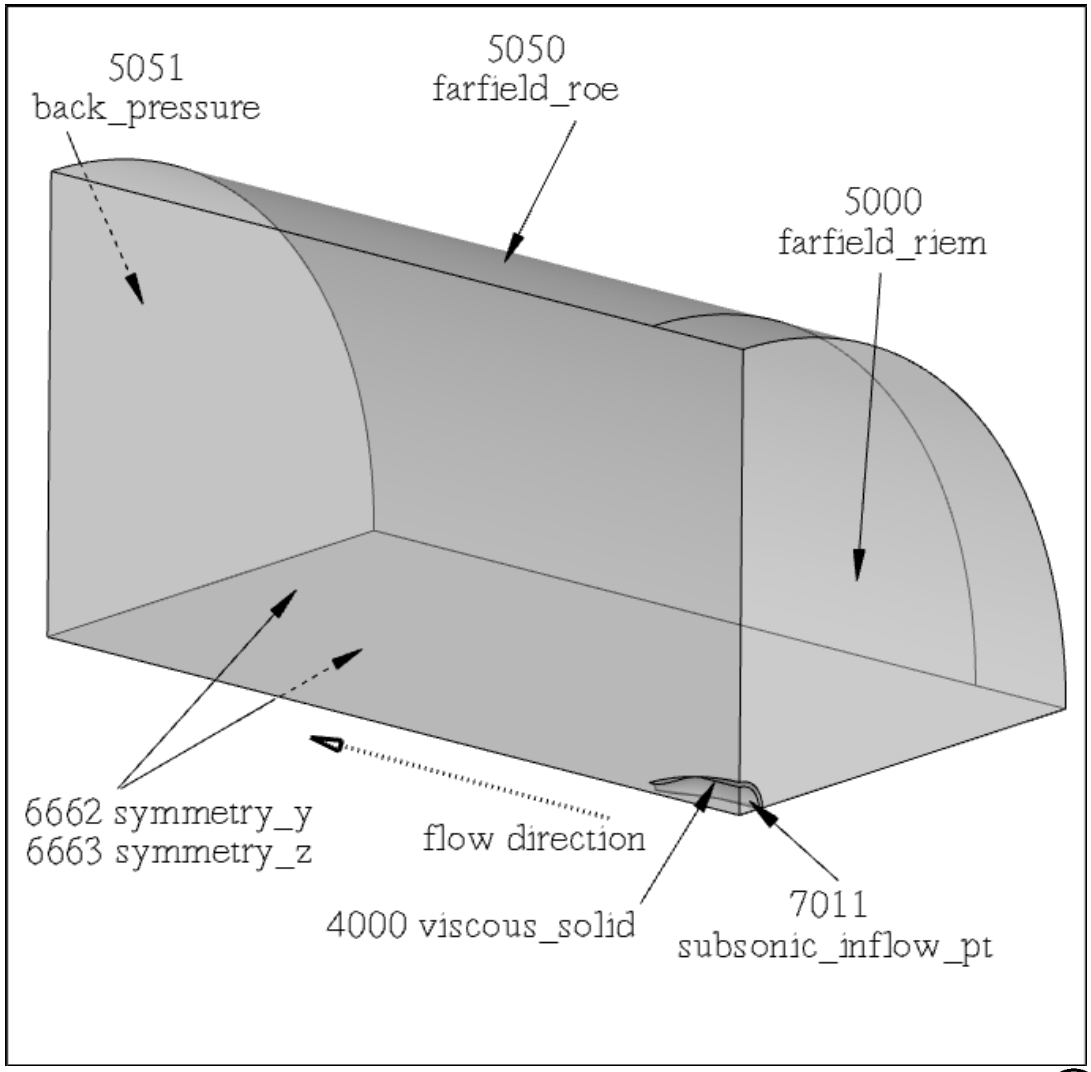

Nozzle w/ subsonic plenum

arn2.mapbc and fun3d.nml

```
13              number of boundaries
   1    4000    viscous_solid
   2    7011    nozzle plenum inflow boundary
   3    6662    y-symmetry
   4    6663    z-symmetry
   5    4000    viscous_solid
   6    5000    farfield_riem
   7    5000    farfield_riem
   8    6662    y-symmetry
   9    6663    z-symmetry
  10    5000    farfield_riem
  11    5051    outflow boundary
  12    6662    y-symmetry
  13    6663    z-symmetry

&boundary_conditions
  total_pressure_ratio(2)     = 1.197
  total_temperature_ratio(2)  = 0.950
  static_pressure_ratio(11)   = 1.0
/
```

Note: Do not lump boundaries if there are more than one inflow or outflow boundaries that require separate settings…

Nozzle w/ subsonic plenum

fun3d.nml

```
&boundary_conditions
   total_pressure_ratio(2)     = 1.197
   total_temperature_ratio(2) = 0.950
   static_pressure_ratio(11)   = 1.0
 /
&nonlinear_solver_parameters
   time_accuracy          = '2ndorderOPT'
   time_step_nondim       = 0.05
   pseudo_time_stepping   ='on'
   subiterations          = 15
   schedule_iteration     = 1  500
   schedule_cfl           = 1.0 1.0
   schedule_cflturb       = 1.0 1.0
 /
&flow_initialization
number_of_volumes = 1
type_of_volume(1) = 'cylinder'
      point1(1,:) = -12.,0.,0.
      point2(1,:) =  20.,0.,0.
      radius(1)   = 3.00
      rho(1)      = 0.4
      c(1)        = 1.6
      u(1)        = 0.0
      v(1)        = 0.0
      w(1)        = 0.0
  /
```

Nozzle w/ subsonic plenum

fun3d.nml

```
&project
    project_rootname = 'arn2'
 /
&raw_grid
   grid_format = 'aflr3'
   data_format = 'unformatted'
 /
&global
    boundary_animation = -1
 /
&governing_equations
    viscous_terms    = 'turbulent'
 /
&inviscid_flux_method
    flux_limiter           = 'none'
    flux_construction      = 'roe'
 /
&turbulent_diffusion_models
    turbulence_model          = 'sst'
 /
&code_run_control
    steps              = 5000
    restart_write_freq =  250
    restart_read       = 'off'
 /
```

Nozzle w/ subsonic plenum

fun3d.nml

```
&sampling_parameters
   number_of_geometries  = 1
   type_of_geometry(1)   = 'line'
 sampling_frequency(1)   = -1
    number_of_lines(1)   = 1
          p1_line(:,1)   =-10.,0.01,0.01
          p2_line(:,1)   = 60.,0.01,0.01
      variable_list(1)   ='x,y,z,rho,u,v,w,p,mach,temperature,mu_t_ratio,
u_tavg,p_tavg,u_trms,p_trms'
/
&boundary_output_variables
   number_of_boundaries=13
   boundary_list='1-13'
   mach   = .true.
   turb1  = .true.
   turb2  = .true.
   mu_t   = .true.
/
&reference_physical_properties
    temperature_units = 'Kelvin'
    mach_number       =  0.513
    reynolds_number   =  328000.
    temperature       =  266.0
 /
```

(Here Mach number and Reynolds number serve as the viscous scaling for the simulation since the jet is exhauting in to quiescent flow.)

Nozzle w/ subsonic plenum

- Execution

```
mpirun nodet_mpi \
  --alternate_freestream 0.05  \
  > screen_output
```

- Files output
  - history file: **`arn2_hist.tec`**
  - sampled data: **`arn2_tec_sampling_geom1.dat`**
  - flowfield data: **`arn2_tec_boundary.dat`**

The reference conditions for this problem were related to average jet exit conditions since the jet is exhausting in to a quiescent freestream (The input `mach_number` must be greater than zero). The factor `--alternate_freestream` is a multiplier applied to the input paramter `mach_number` to create an alternate freestream for the farfield boundary conditions.

Nozzle w/ subsonic plenum

Turbulent kinetic energy

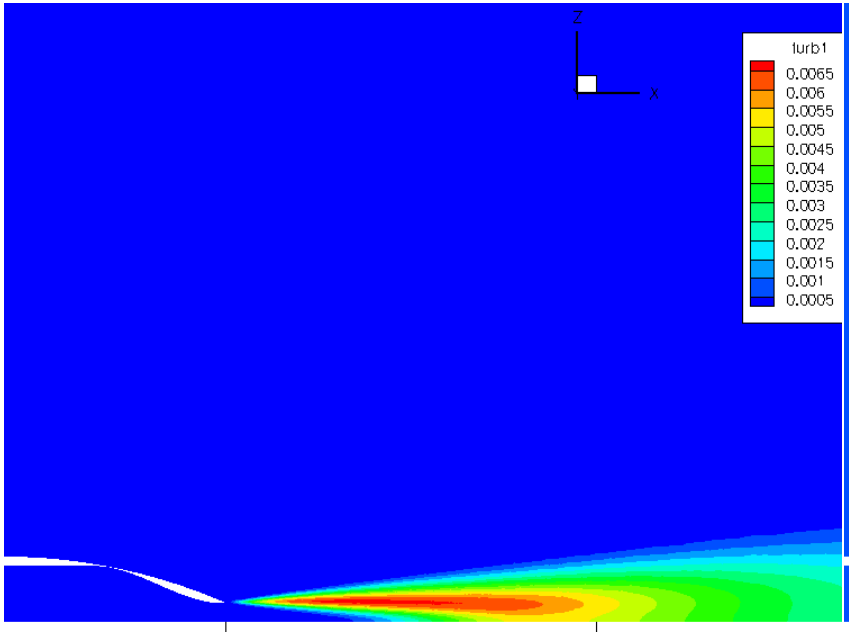

Mach number

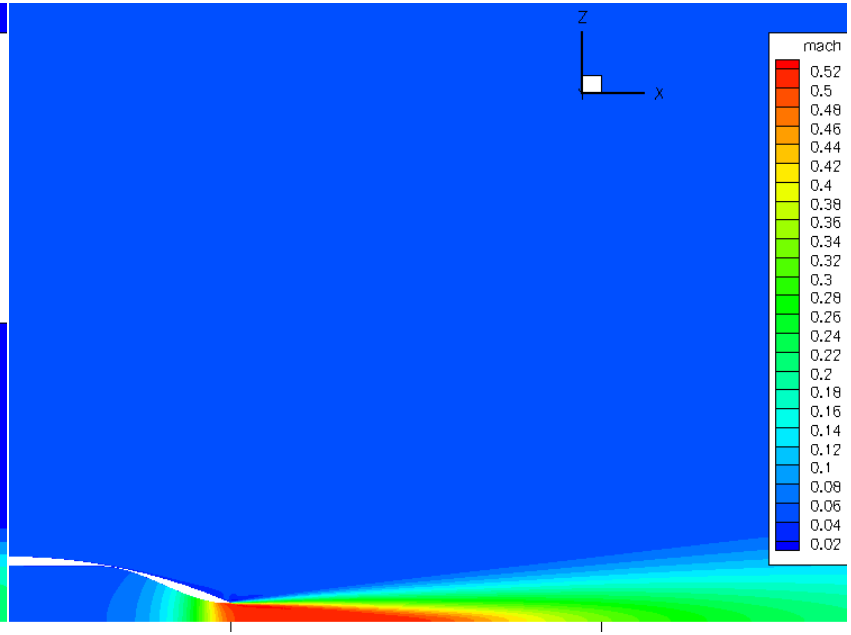

Inlet

Generic bell mouth (bell2)

- Namelist settings
- Execution
- Output

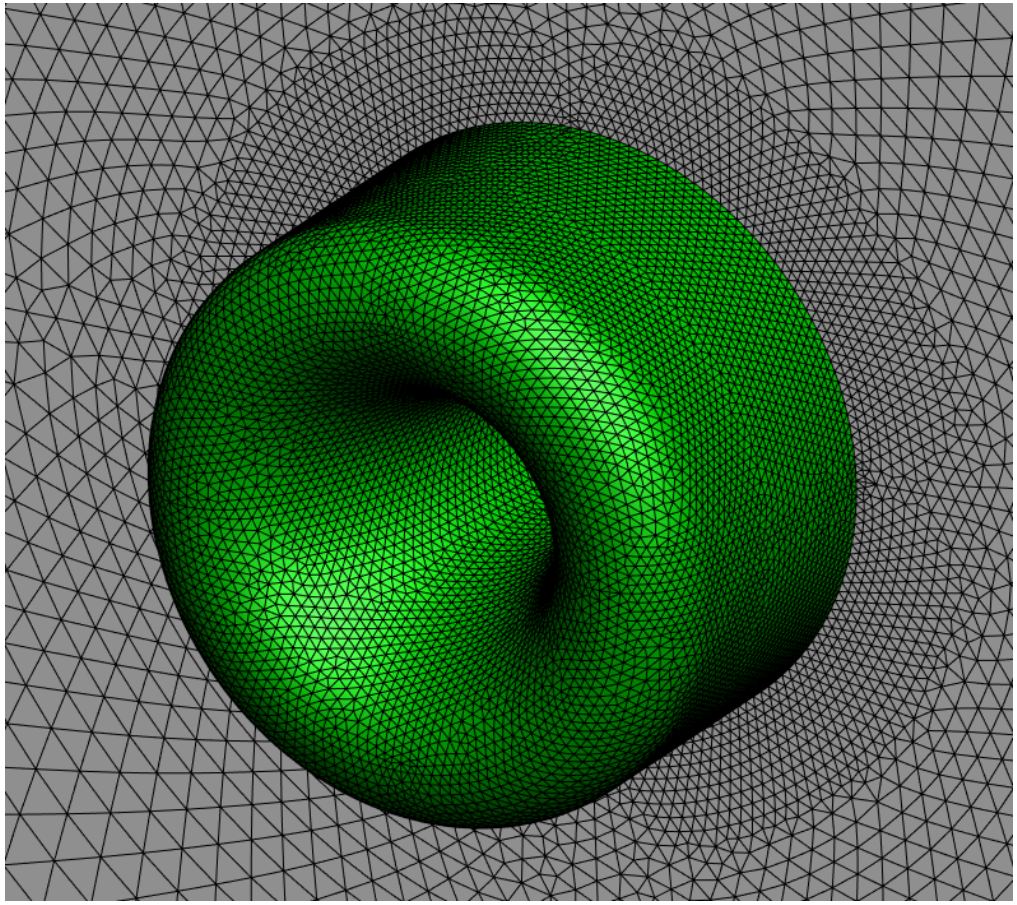

Inlet problem

Generic bell mouth (bell2)

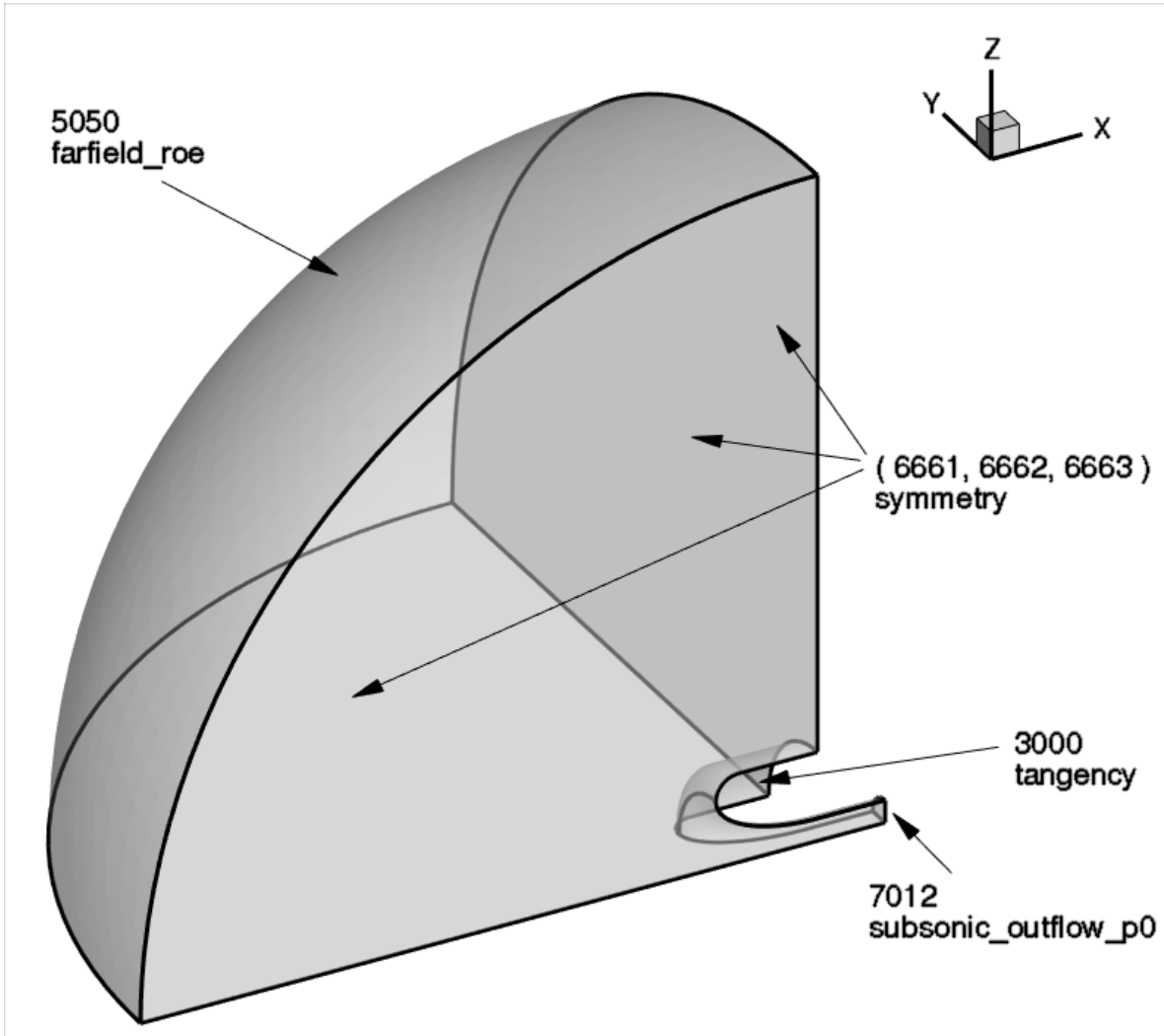

Inlet

bell2.mapbc and fun3d.nml

```
#Tue Apr  8 12:48:03 2008
#bell2.mapbc
Patch #        BC             Family    #surf   surfIDs         Family
#-----------------------------------------------------------------------
1              7012           1              0            0        inlet
2              5050           1              0            0        inflow
3              6662           1              0            0        symmetry_y
4              6663           1              0            0        symmetry_z
5              5050           2              1            8        farfield
6              3000           5              0            0        bellmouth
7              3000           5              0            0        bellmouth
```

fun3d.nml

```
&governing_equations
   viscous_terms        = 'inviscid'
/

&reference_physical_properties
   temperature_units = 'Rankine'
   mach_number       = 0.20
   reynolds_number   = 1.0e+5
   temperature       = 390.0
/

&boundary_conditions
 static_pressure_ratio(1)  = 0.95
/
```

Inlet

fun3d.nml

```
&code_run_control
   steps              = 5000
   restart_read       = 'off'
   restart_write_freq = 1000
   stopping_tolerance = 1.0E-15
/

&component_parameters
  number_of_components      = 1
  component_count(1)        = 1
  component_input(1)        = '1'
  component_name(1)         = 'inlet'
  allow_flow_through_forces = T
/

&boundary_output_variables
 number_of_boundaries = -1
 boundary_list = '1-7'
/

&nonlinear_solver_parameters
   time_accuracy      = 'steady'
   schedule_iteration = 1  100
   schedule_cfl       = 1. 100.
/
```

Inlet

Residual and convergence of bc

Execute statement: `mpirun nodet_mpi`

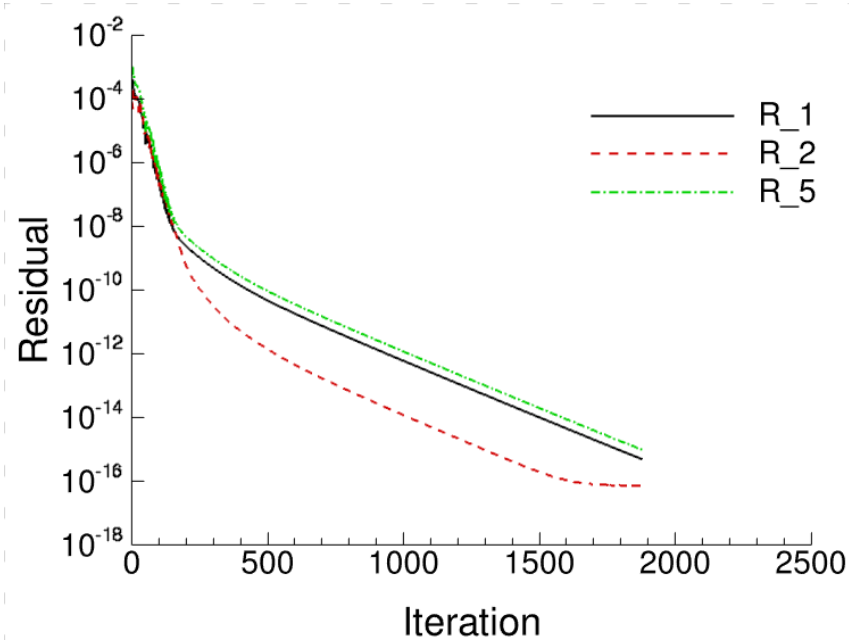

Solution residual
(plotting bell2_hist.dat)

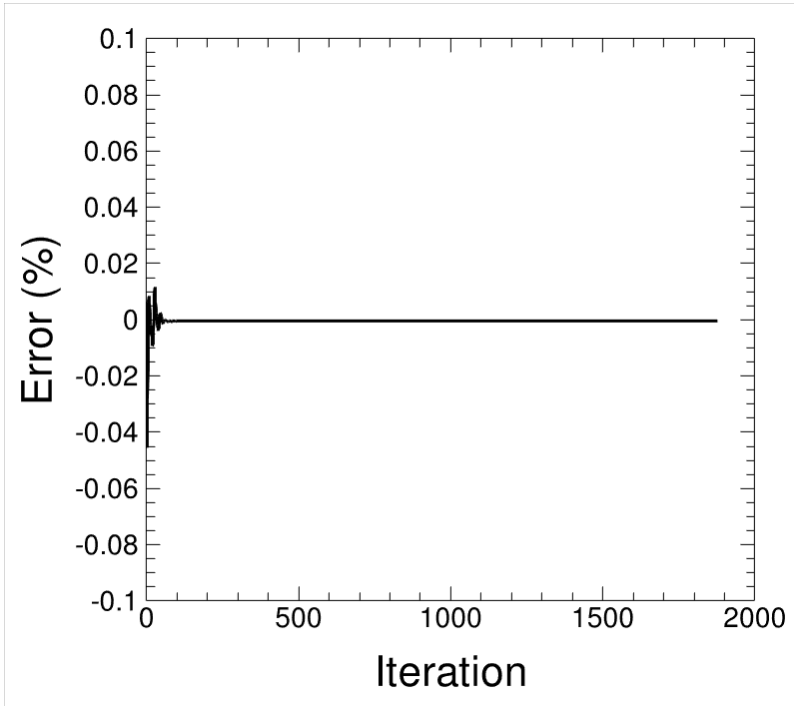

Error in set boundary condition
(plotting bell2_fm_inlet.dat)

Fixed Inflow Profile (7101)

quadratic profile example

```
 r = sqrt( (x-patch_center(ib,1))**2
         + (y-patch_center(ib,2))**2
         + (z-patch_center(ib,3))**2 )
      r = r / patch_scale(ib)
density = profile_rho_coef(ib,0)
        + profile_rho_coef(ib,1)*r
        + profile_rho_coef(ib,2)*r**2
        + profile_rho_coef(ib,3)*r**3
        + profile_rho_coef(ib,4)*r**4
        + profile_rho_coef(ib,5)*r**5
        + profile_rho_coef(ib,6)*r**6
velocity = profile_u_coef(ib,0)
         + profile_u_coef(ib,1)*r
         + profile_u_coef(ib,2)*r**2
         + profile_u_coef(ib,3)*r**3
         + profile_u_coef(ib,4)*r**4
         + profile_u_coef(ib,5)*r**5
         + profile_u_coef(ib,6)*r**6
pressure = profile_p_coef(ib,0)
         + profile_p_coef(ib,1)*r
         + profile_p_coef(ib,2)*r**2
         + profile_p_coef(ib,3)*r**3
         + profile_p_coef(ib,4)*r**4
         + profile_p_coef(ib,5)*r**5
         + profile_p_coef(ib,6)*r**6
```

This sample namelist creates a profile constant in pressure, linear in velocity and quadratic in density, centered on (-2.,0.,0.) and physically scaled by the factor of 10.

```
&boundary_conditions
  patch_center(1,:)    =-2.0,0.,0.
  patch_scale(1)       = 10.
  profile_rho_coef(1,0)=1.
  profile_rho_coef(1,2)=1.
  profile_u_coef(1,1)  =1.
  profile_p_coef(1,0)  =0.714
/
```

Extra problems

Sample Problem

2D-airfoil (NACA-4412)

- Geometry
- Namelist settings
- Execution
- Output

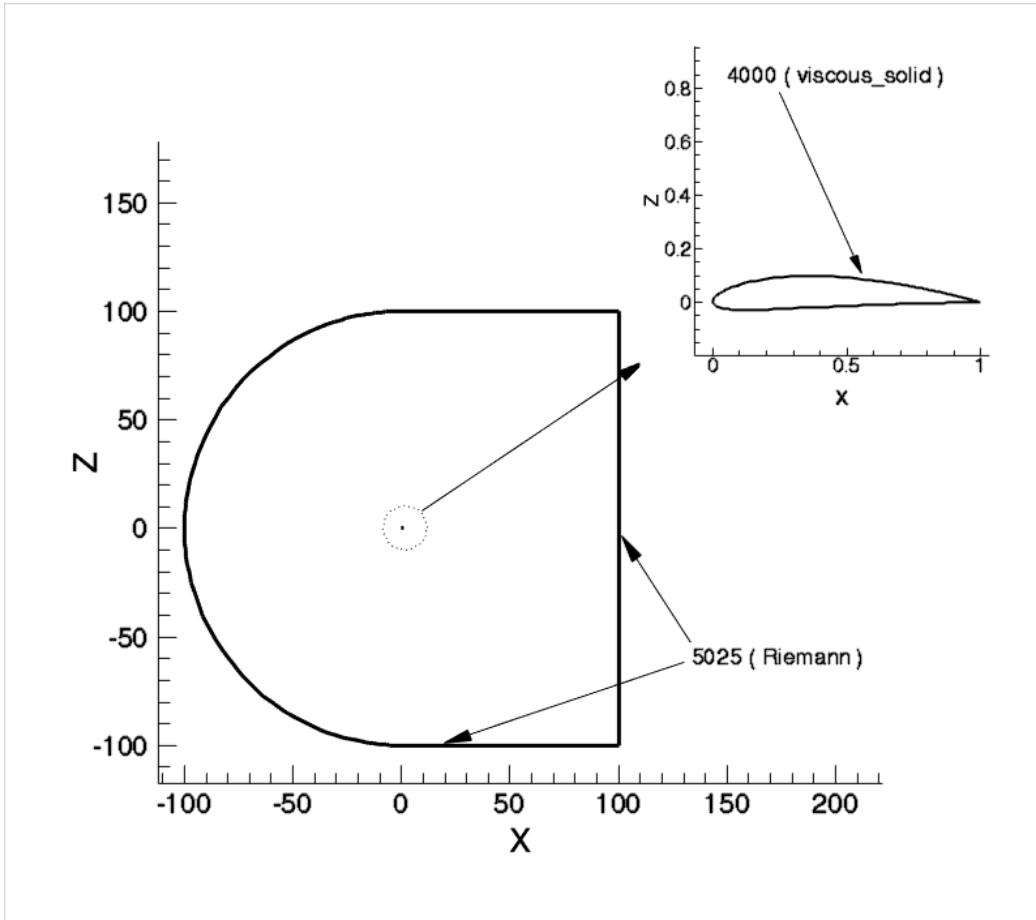

http://turbmodels.larc.nasa.gov/naca4412sep_val.html

2D-Airfoil (NACA-4412)

Geometry

```
Grid and boundary condition files:

http://turbmodels.larc.nasa.gov/NACA4412sep_grids/n4412_225-65.p3dfmt.gz
http://turbmodels.larc.nasa.gov/NACA4412sep_grids/n4412_225-65.nmf

# ===== Neutral Map File generated by the V2k software of NASA Langley's GEOLAB ===== \
# ====================BC names in this example are from FUN3D======================== \
# Block#   IDIM   JDIM   KDIM \
# ------------------------------------------------------------------------------------ \
      1 \
 \
      1      2   225     65 \
 \
# ==================================================================================== \
# Type            B1  F1  S1   E1  S2   E2   B2  F2   S1   E1   S2  E2  Swap \
# ------------------------------------------------------------------------------------ \
'symmetry_y_strong' 1   3   1  225   1   65 \
'symmetry_y_strong' 1   4   1  225   1   65 \
'farfield_riem'     1   5   1   65   1    2 \
'farfield_riem'     1   6   1   65   1    2 \
'viscous_solid'     1   1   1    2  49  177 \
'farfield_riem'     1   2   1    2   1  225 \
'one-to-one'        1   1   1    2   1   49  1   1   1   2  225   177  false
 /
```

2D-Airfoil (NACA-4412)

Namelist input

```
&project
    project_rootname = 'naca4412'
/
 &reference_physical_properties
    mach_number       = 0.09
    reynolds_number   = 1.52e6
    temperature       = 536.0
    angle_of_attack   = 13.87
    temperature_units = 'Rankine'
 /
&turbulent_diffusion_models
    turbulence_model = 'sa-neg'
 /
 &nonlinear_solver_parameters
    schedule_iteration = 1    100
    schedule_cfl       = 1.0  100.0
    schedule_cflturb   = 1.0  100.0
    tightly_couple     = T
 /
```

http://turbmodels.larc.nasa.gov/naca4412sep_val.html

2D-Airfoil (NACA-4412)

Namelist input

```
&code_run_control
    steps              = 10000
    restart_read       = 'off'
    restart_write_freq = 1000
    stopping_tolerance = 1.0E-15
 /

&boundary_output_variables
number_of_boundaries = 2
boundary_list        = '1,5'
mu_t     = .true.
turb1    = .true.
uwprime  = .true.
slen     = .true.
cp       = .true.
skinfr   = .true.
yplus    = .true.

/&spalart
 turbinf = 3.0
/
```

2D-Airfoil (NACA-4412)

Namelist input

```
&raw_grid
     grid_format   = 'aflr3'
     data_format   = 'stream'
     twod_mode     = T
/
 &global
   boundary_animation_freq = -1
/
 &sampling_parameters
   number_of_geometries = 7
    type_of_geometry(1) = 'line'
               label(1) = 'Sta.0.6753'
     number_of_lines(1) = 1
           p1_line(:,1) = 0.6753,-0.1,  0.
           p2_line(:,1) = 0.6753,-0.1, 10.
       variable_list(1) ='x,y,z,rho,u,v,w,p,mu_t,turb1,uvprime,uwprime,slen'
  sampling_frequency(1) = -1
    type_of_geometry(2) = 'line'
               label(2) = 'Sta.0.7308'
     number_of_lines(2) = 1
           p1_line(:,2) = 0.7308,-0.1,  0.
           p2_line(:,2) = 0.7308,-0.1, 10.
       variable_list(2) ='x,y,z,rho,u,v,w,p,mu_t,turb1,uvprime,uwprime,slen'
  sampling_frequency(2) = -1
```

2D-Airfoil (NACA-4412)

Namelist input

```
type_of_geometry(3) = 'line'
               label(3) = 'Sta.0.7863'
     number_of_lines(3) = 1
           p1_line(:,3) = 0.7863,-0.1,  0.
           p2_line(:,3) = 0.7863,-0.1, 10.
      variable_list(3) ='x,y,z,rho,u,v,w,p,mu_t,turb1,uvprime,uwprime,slen'
  sampling_frequency(3) = -1
    type_of_geometry(4) = 'line'
               label(4) = 'Sta.0.8418'
     number_of_lines(4) = 1
           p1_line(:,4) = 0.8418,-0.1,  0.
           p2_line(:,4) = 0.8418,-0.1, 10.
      variable_list(4) ='x,y,z,rho,u,v,w,p,mu_t,turb1,uvprime,uwprime,slen'
  sampling_frequency(4) = -1
    type_of_geometry(5) = 'line'
               label(5) = 'Sta.0.8973'
     number_of_lines(5) = 1
           p1_line(:,5) = 0.8973,-0.1,  0.
           p2_line(:,5) = 0.8973,-0.1, 10.
      variable_list(5) ='x,y,z,rho,u,v,w,p,mu_t,turb1,uvprime,uwprime,slen'
  sampling_frequency(5) = -1
```

2D-Airfoil (NACA-4412)

Namelist input

```
type_of_geometry(6) = 'line'
               label(6) = 'Sta.0.9528'
     number_of_lines(6) = 1
           p1_line(:,6) = 0.9528,-0.1,  0.
           p2_line(:,6) = 0.9528,-0.1, 10.
      variable_list(6) ='x,y,z,rho,u,v,w,p,mu_t,turb1,uvprime,uwprime,slen'
  sampling_frequency(6) = -1
    type_of_geometry(7) = 'volume_points'
    number_of_points(7) = 1
  sampling_frequency(7) = 100
            points(:,7,1) = 2.0,-0.1, -1.0
      variable_list(7) = 'u'
                plot(7) = 'serial_history'
 /
```

2D-Airfoil (NACA-4412)

Execution

run script:

```
cp n4412_225-65.p3dfmt naca4412.p3d
cp n4412_225-65.nmf naca4412.nmf
plot3d_to_aflr3 >> plot3d_to_aflr3.out <<EOF
0
naca4412
0
EOF
mpirun nodet_mpi > screen_output
```

2D-Airfoil (NACA-4412)

Output

File: naca4412_hist.dat

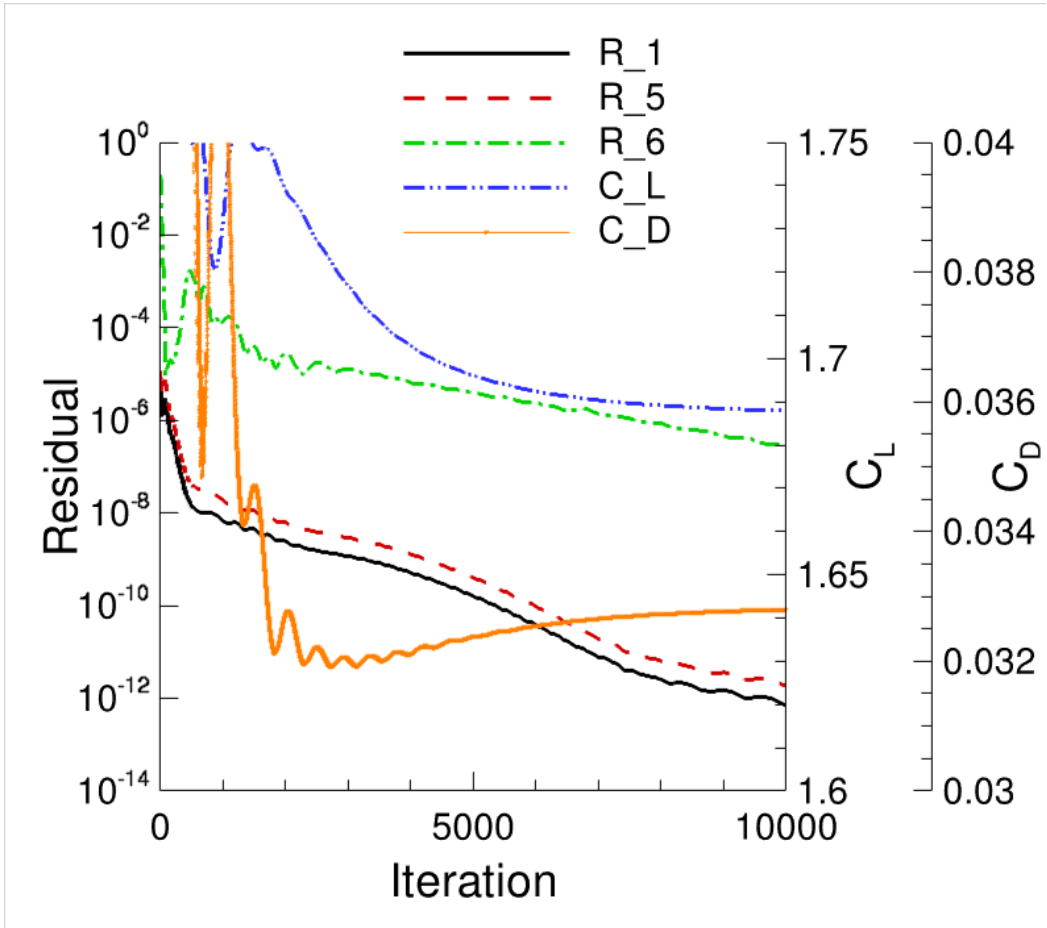

2D-Airfoil (NACA-4412)

Output

File: naca4412_tec_boundary.dat

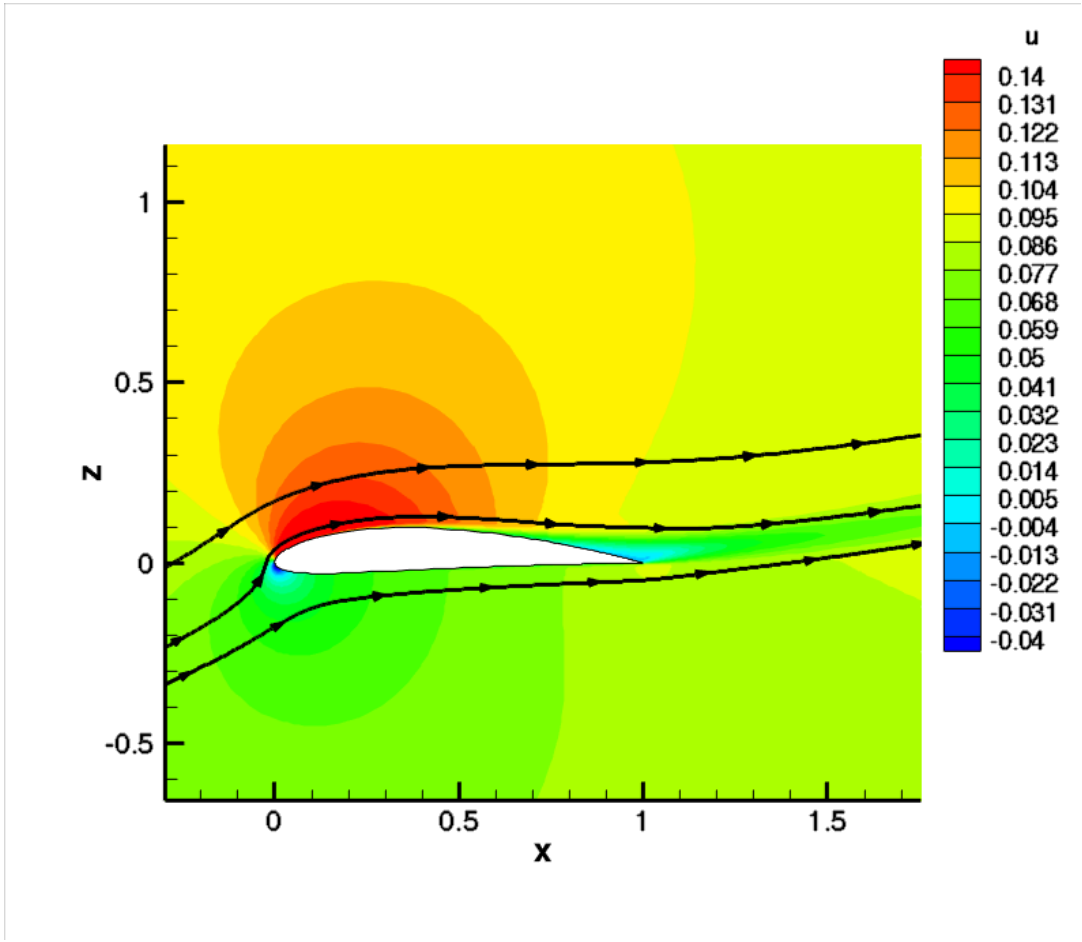

2D-Airfoil (NACA-4412)

Output

Files:

exp.profiles.new.dat
naca4412_Sta.0.6753.dat
naca4412_Sta.0.7308.dat
naca4412_Sta.0.7863.dat
naca4412_Sta.0.8418.dat
naca4412_Sta.0.8973.dat
naca4412_Sta.0.9528.dat